NEW VARIA

NEW TRENDY Sp. z o.o.
Tel. 67 262 12 66
serwis@newtrendy.pl
www.newtrendy.pl

I-1233
v.2

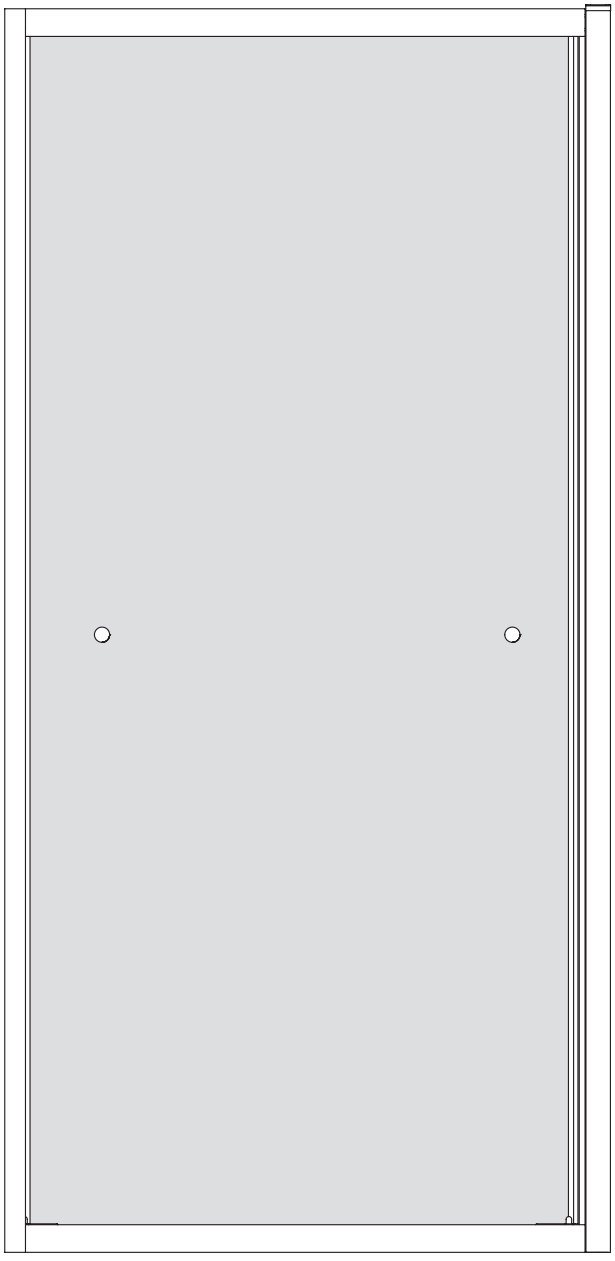

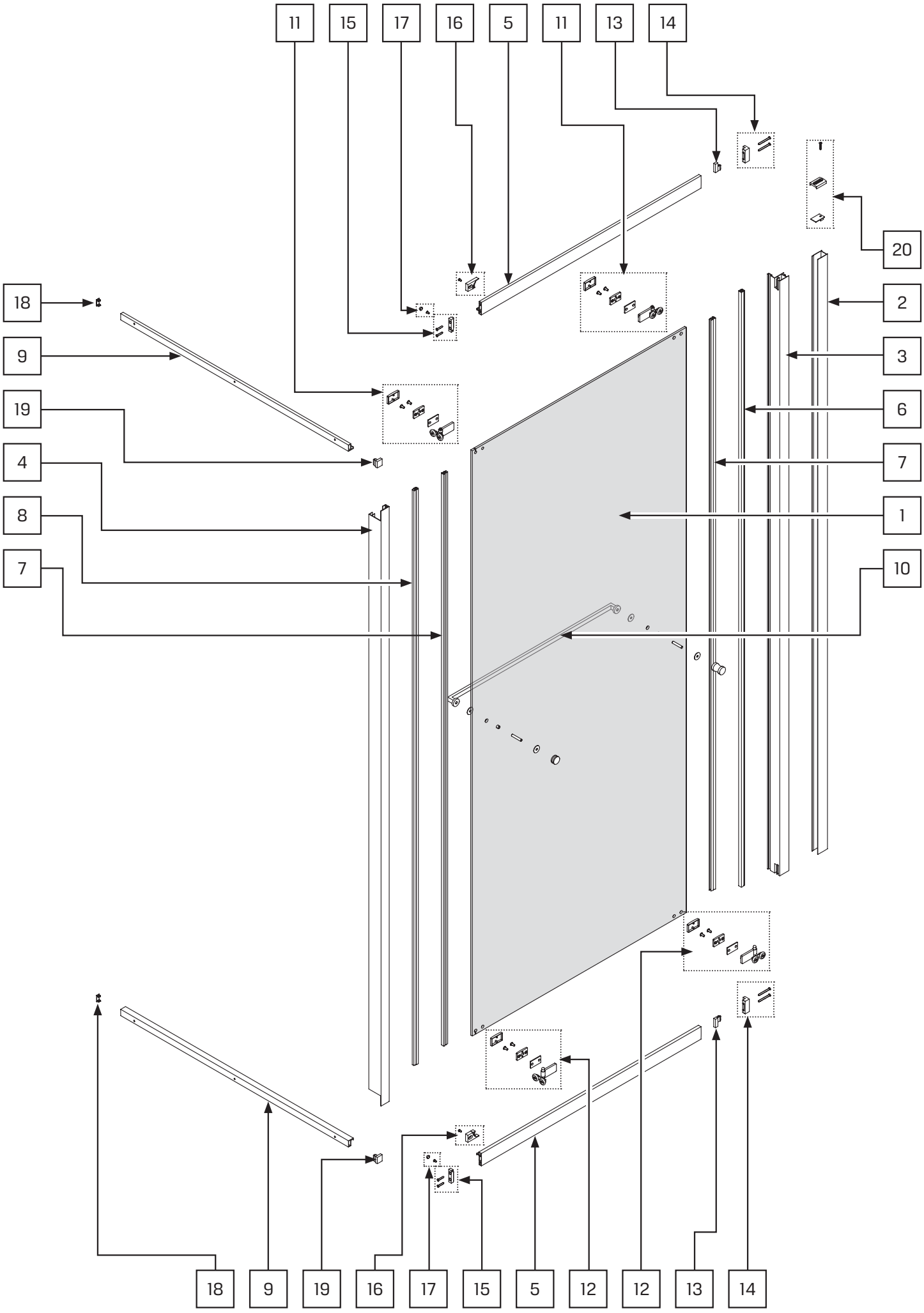
11
15
17
16
5
11
13
14
20
18
2
9
3
19
6
4
7
8
1
7
10
18
9
19
16
17
15
5
12
12
13
14

1

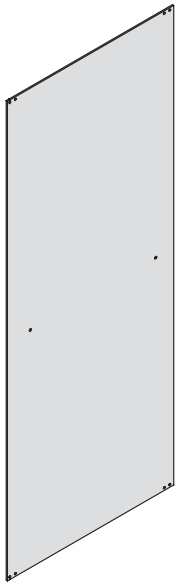

2

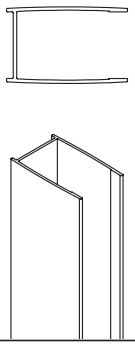

2×

3

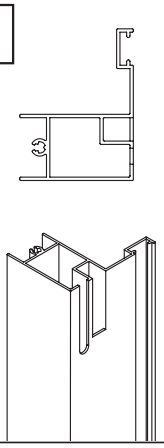

4

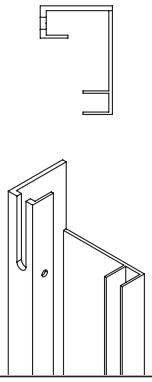

5

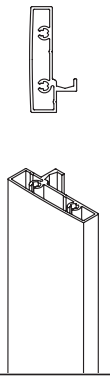

2×

6

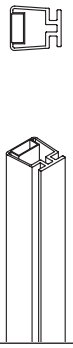

2×

7

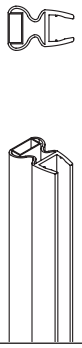

2×

8

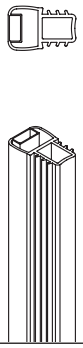

9

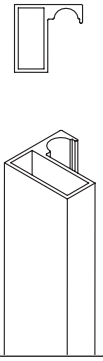

2×

10

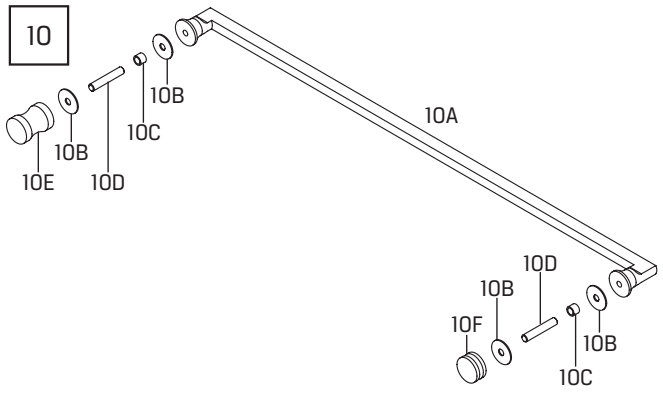

11

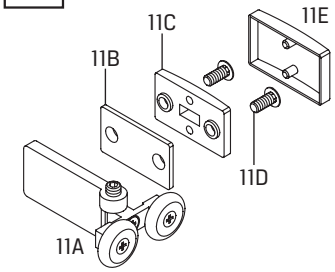

L+R

12

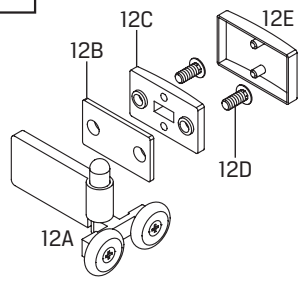

L+R

13

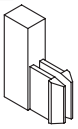

2×

14

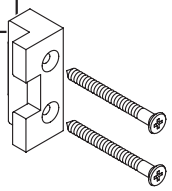

2×

15

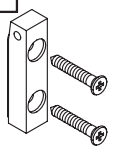

2×

16

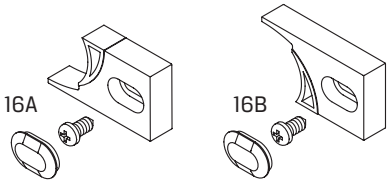

2×

17

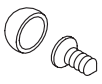

2×

18

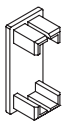

2×

19

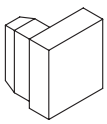

2×

20

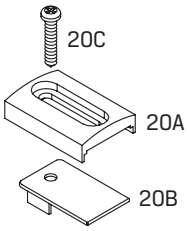

21

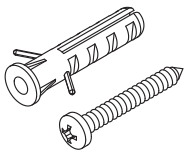

12×

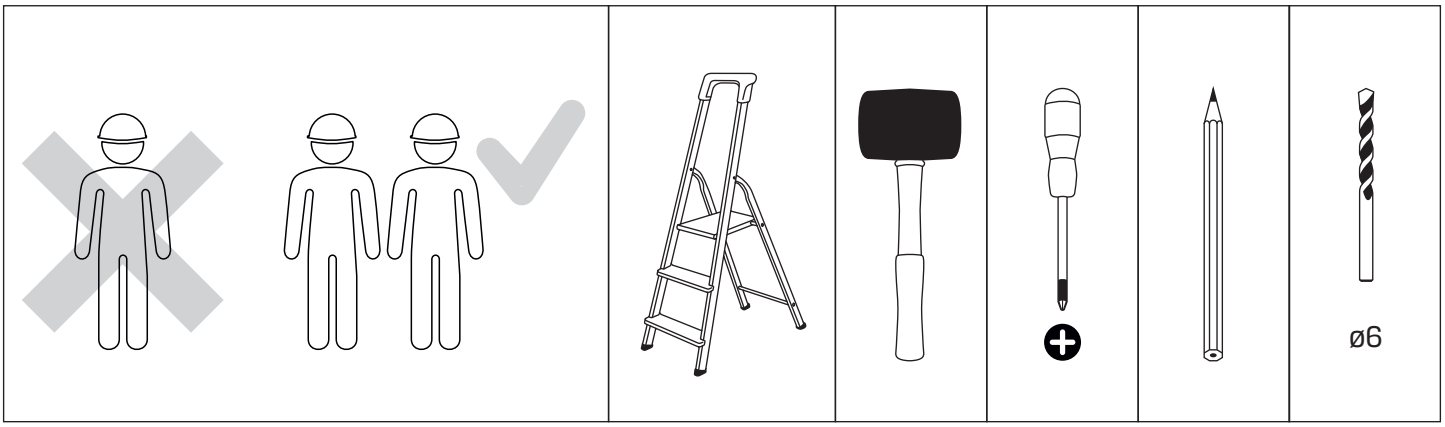
ø6

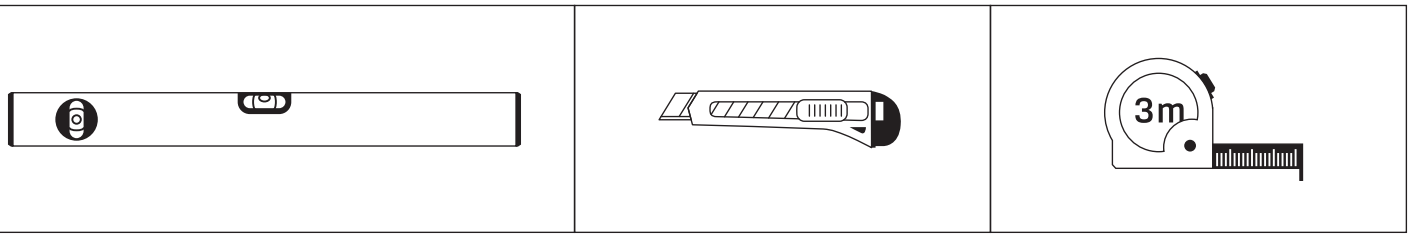
3m

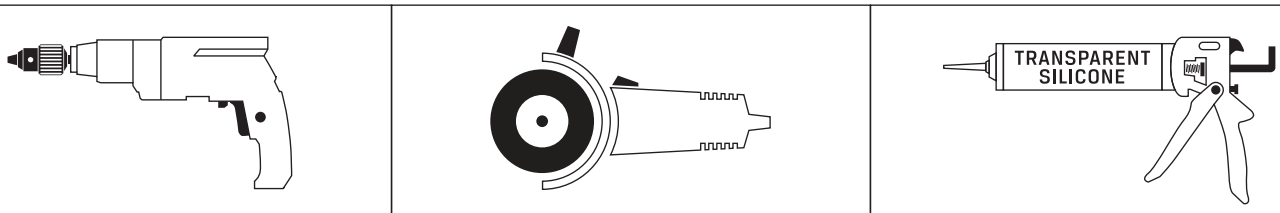
TRANSPARENT
SILICONE

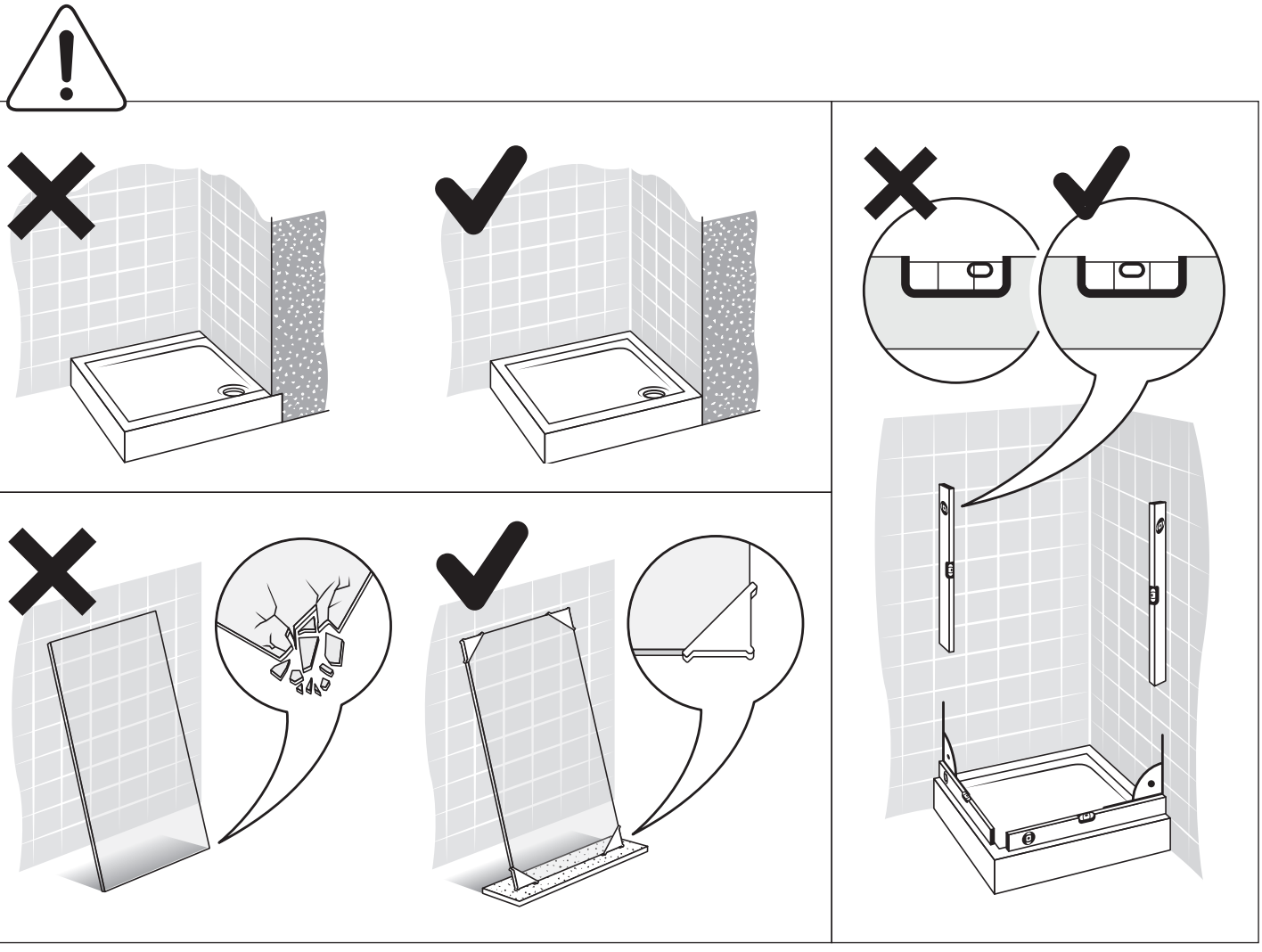

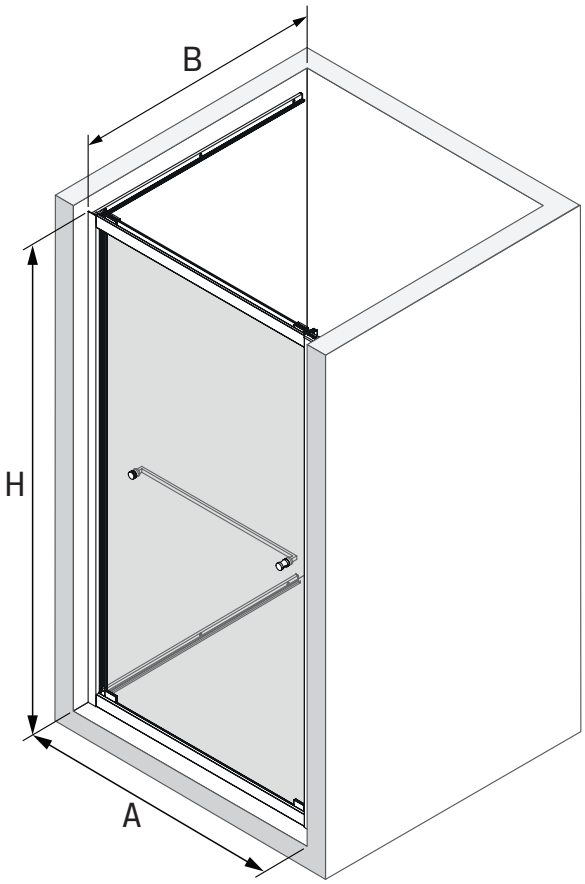

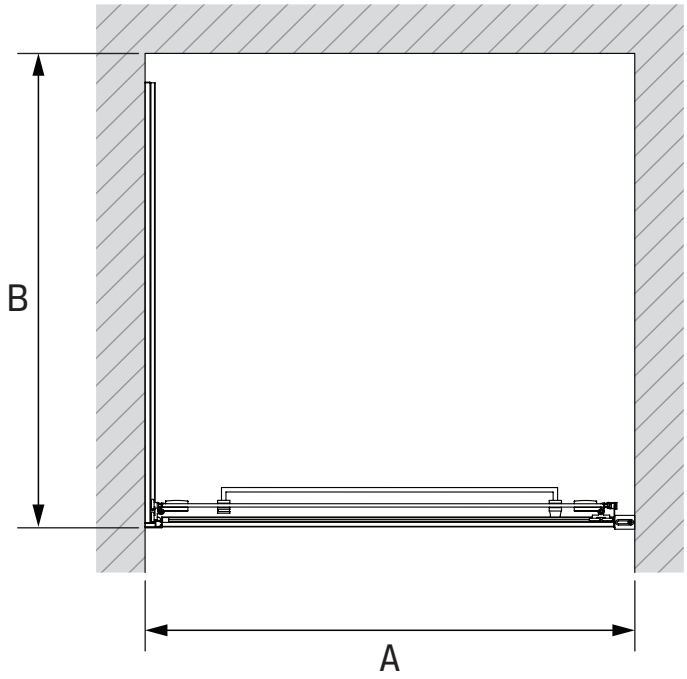

TABELA NIE DOTYCZY KABIN NA WYMIAR!
THE TABLE DOES NOT INCLUDE CUSTOM-MADE ENCLOSURES!

Specyfikacja techniczna ***Kabin Na Wymiar*** znajduje się w potwierdzeniu zamówienia.
The technical specification of the ***Custom-Made Cabin*** can be found in the order confirmation.

	A	B	H
70x200	68-69,5	min. 66,5	200
80x200	78-79,5	min. 76,5	200
90x200	88-89,5	min. 86,5	200

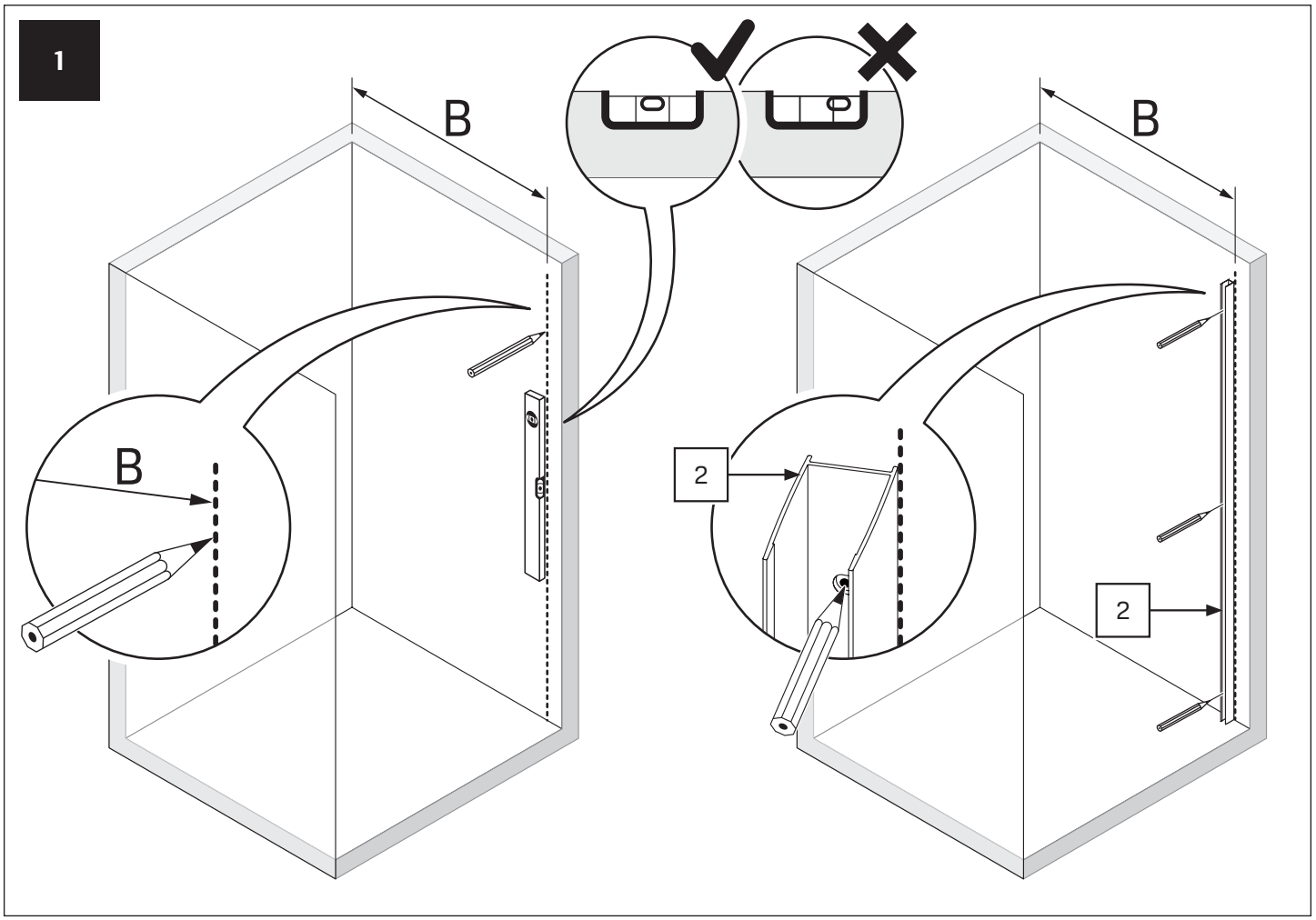
1
B
B
B
2
2

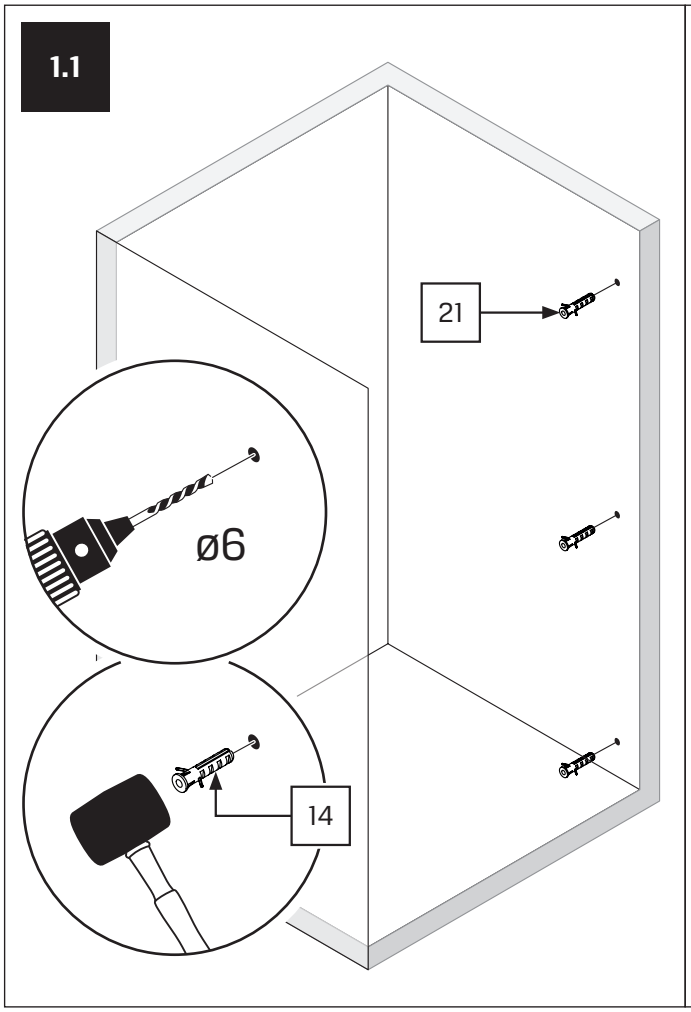
1.1
21
ø6
14

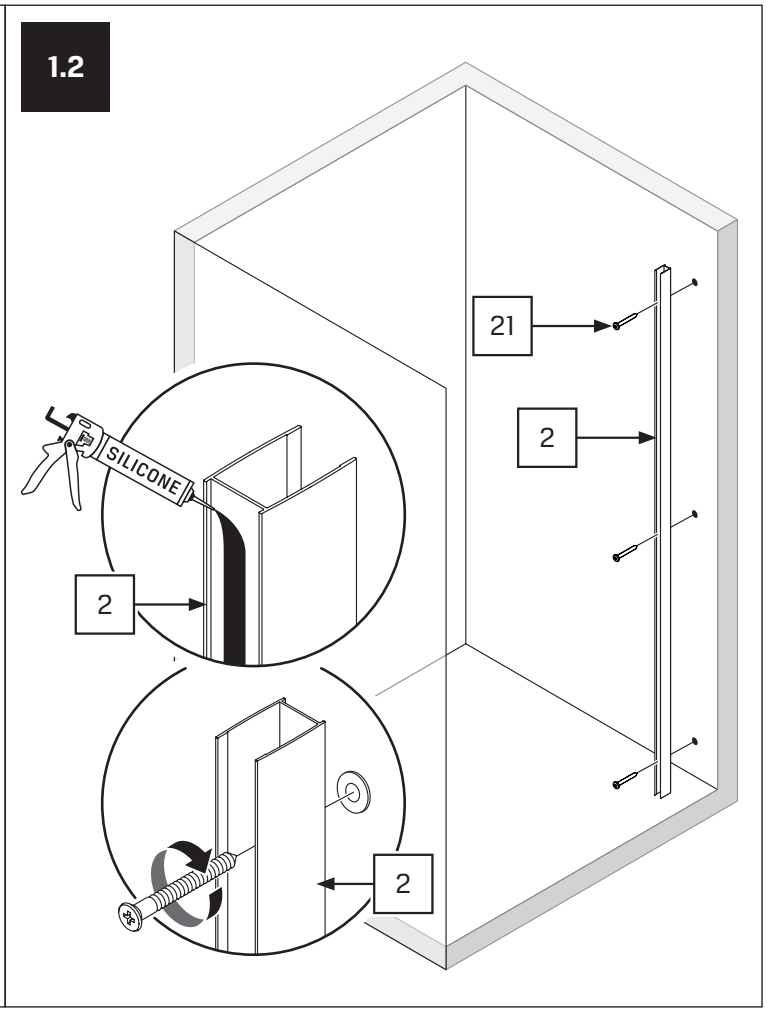
1.2
21
2
SILICONE
2
2

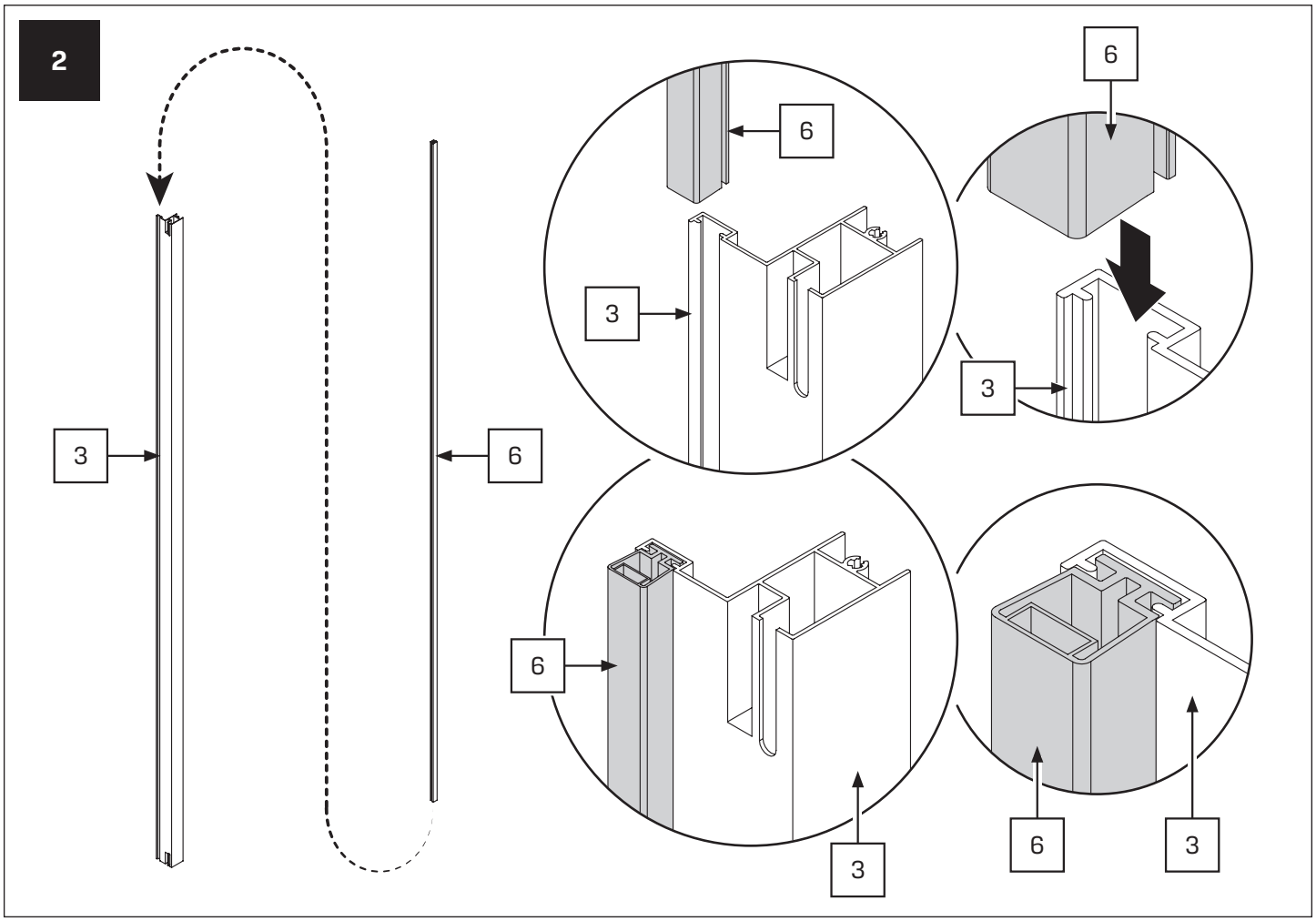
2
3
6
6
3
6
3
6
3
6
3

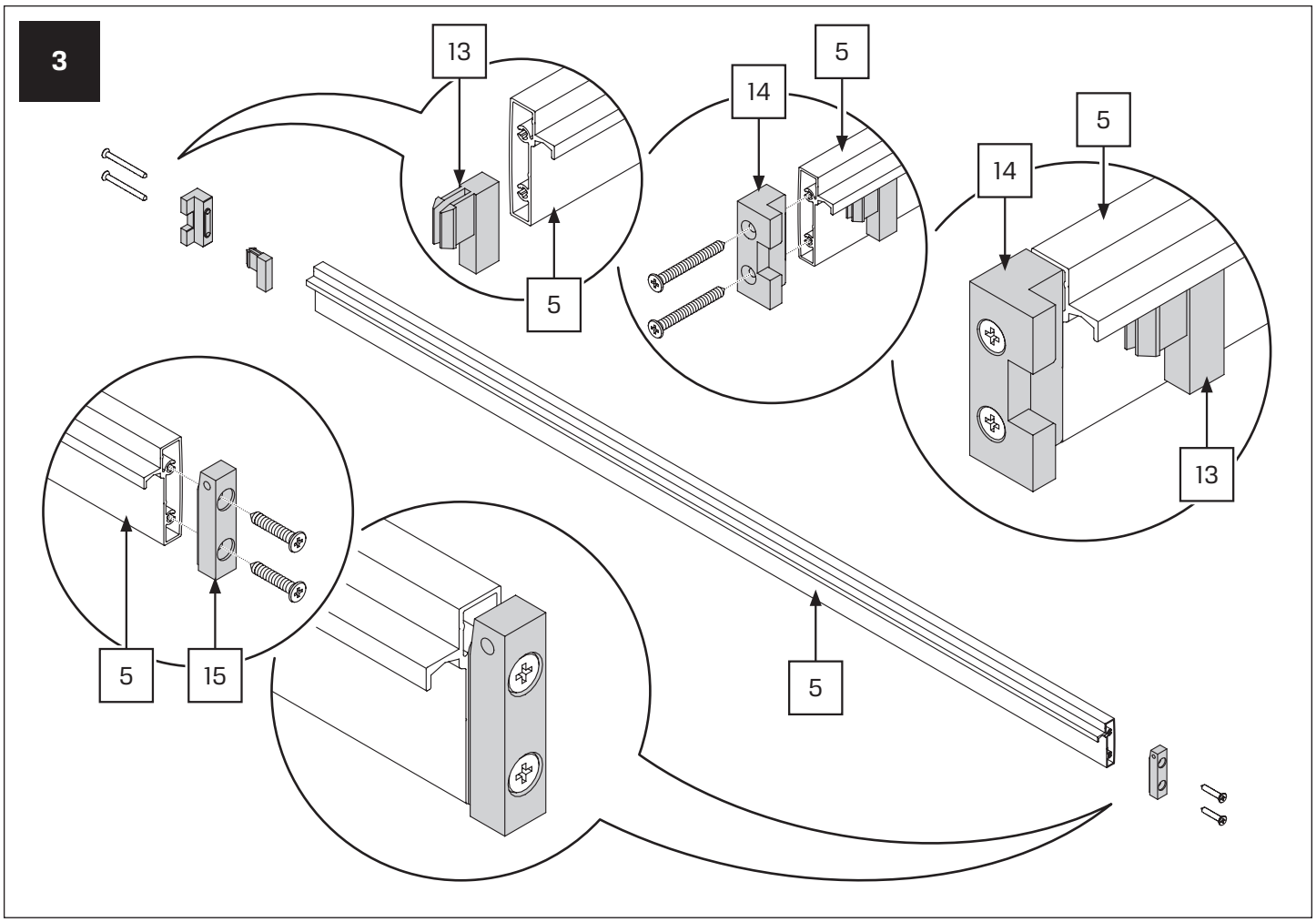
3
13
5
14
5
5
14
13
5
15
5

3.1

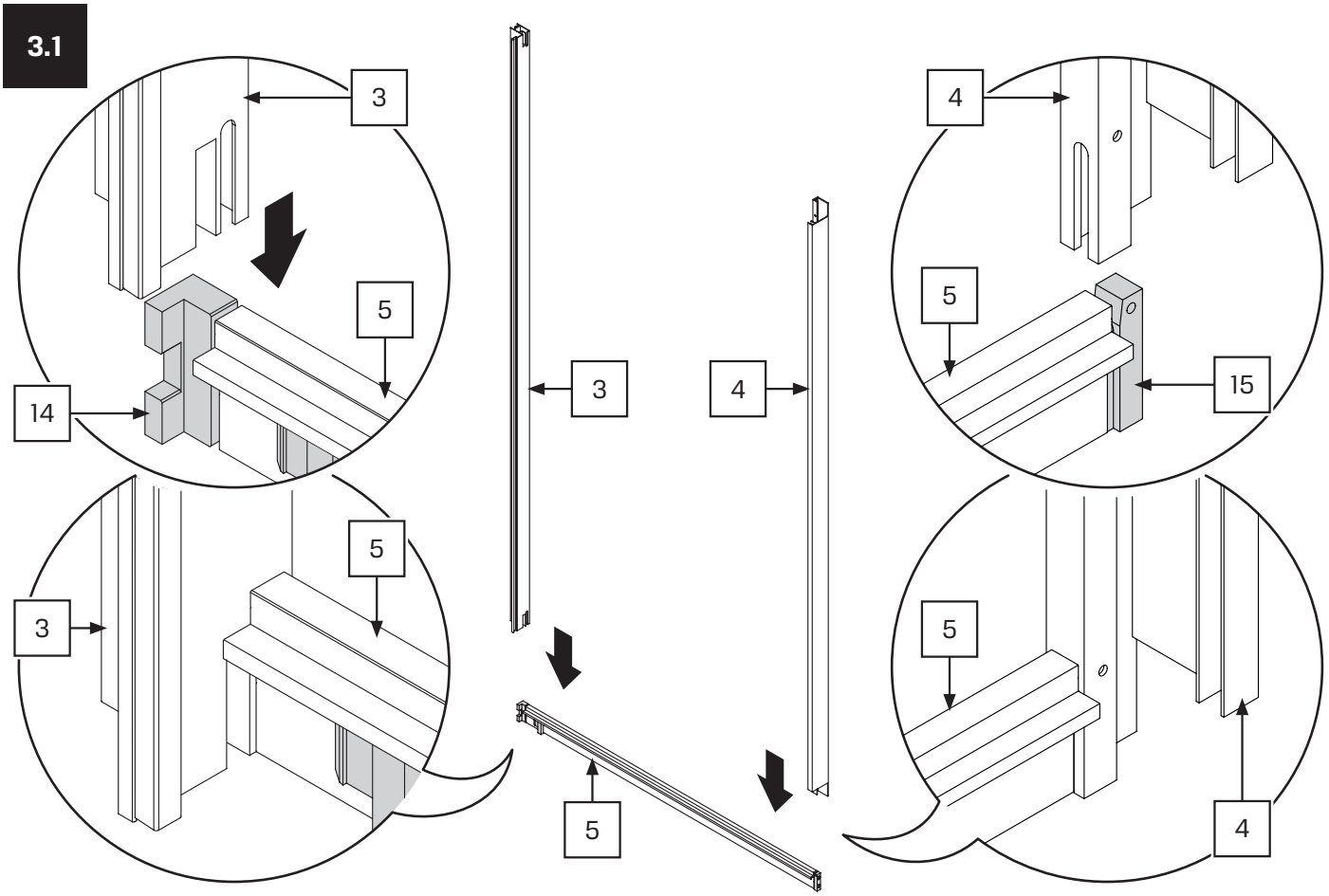

3.2

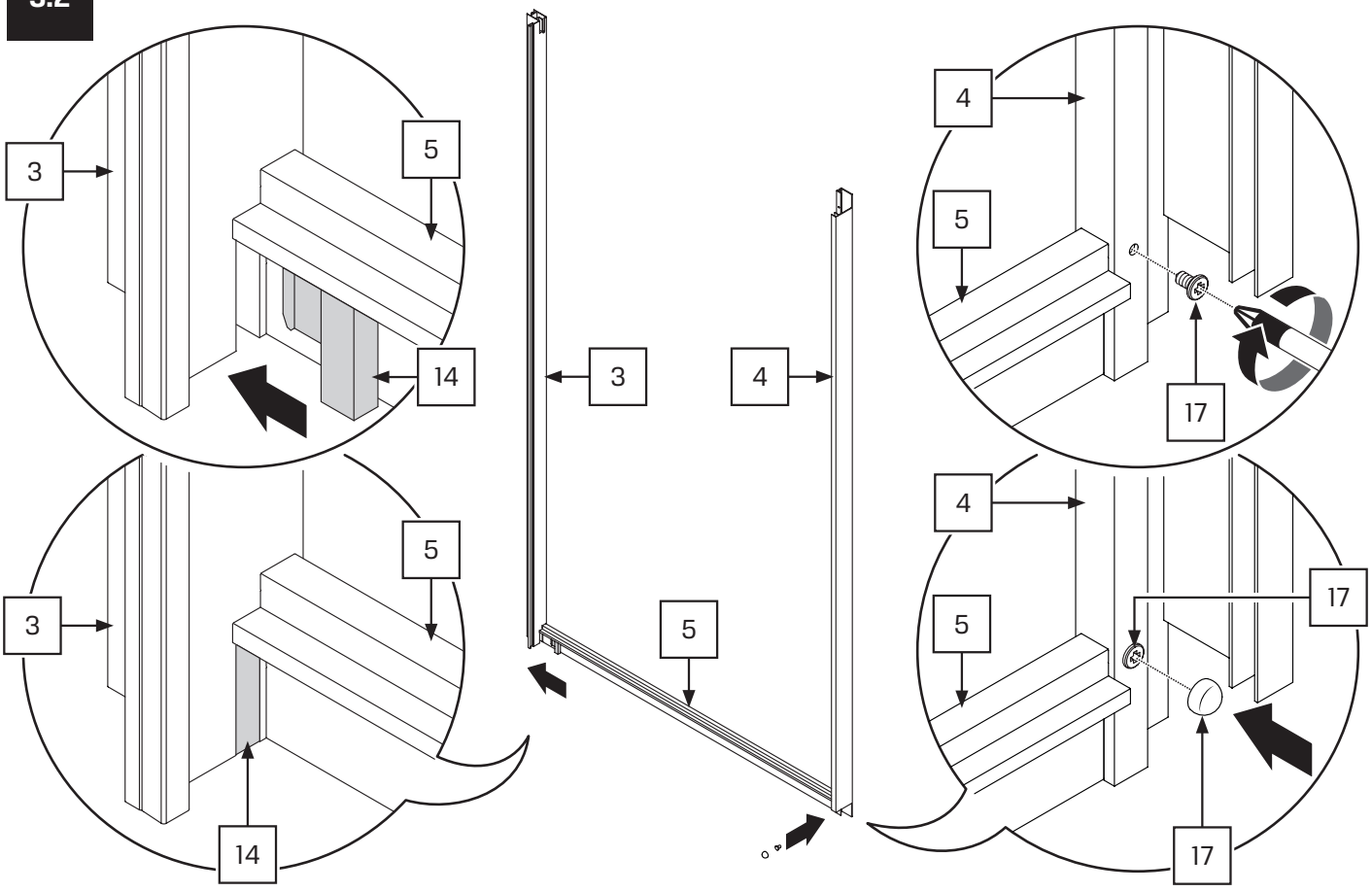

4

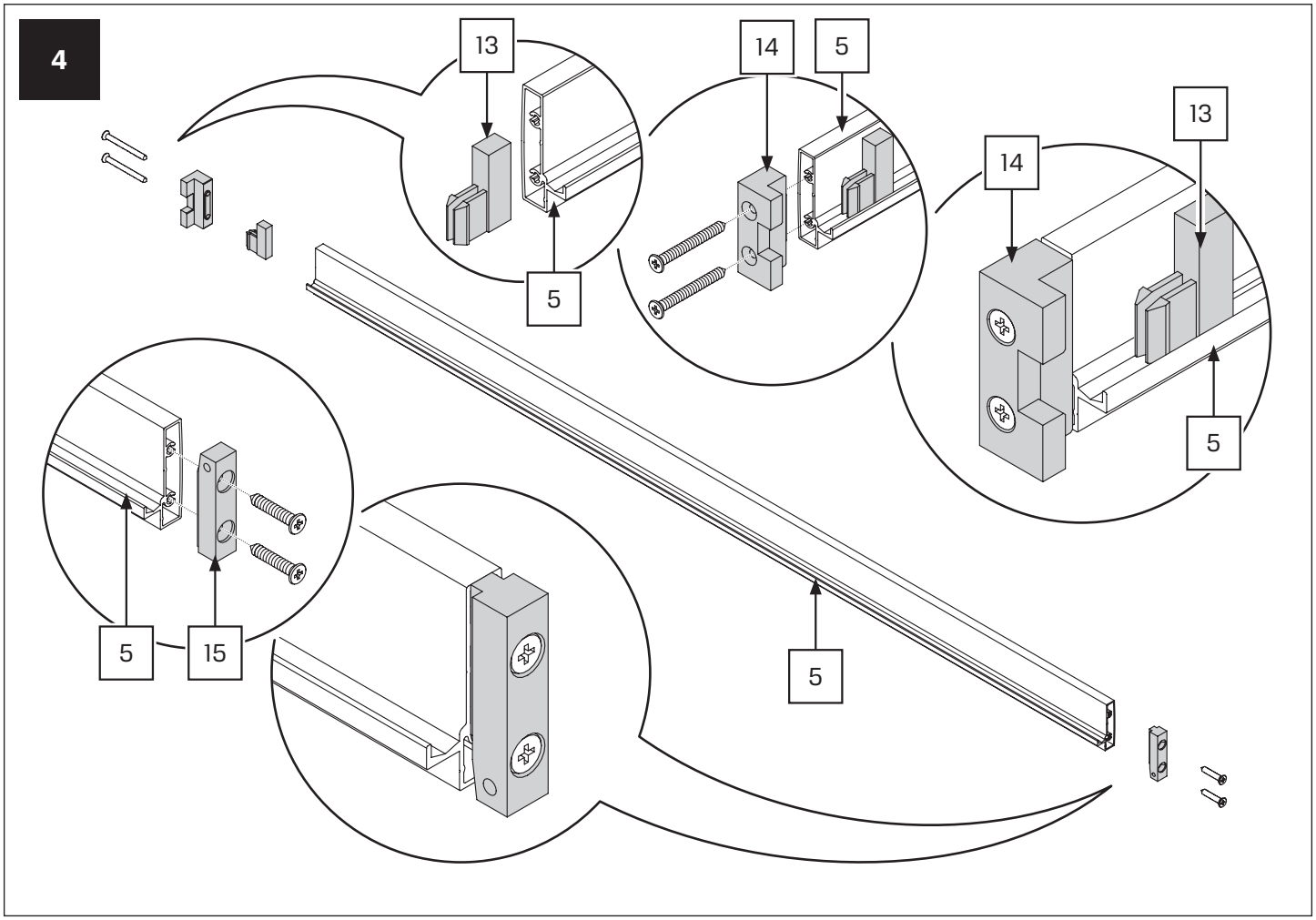

4.1

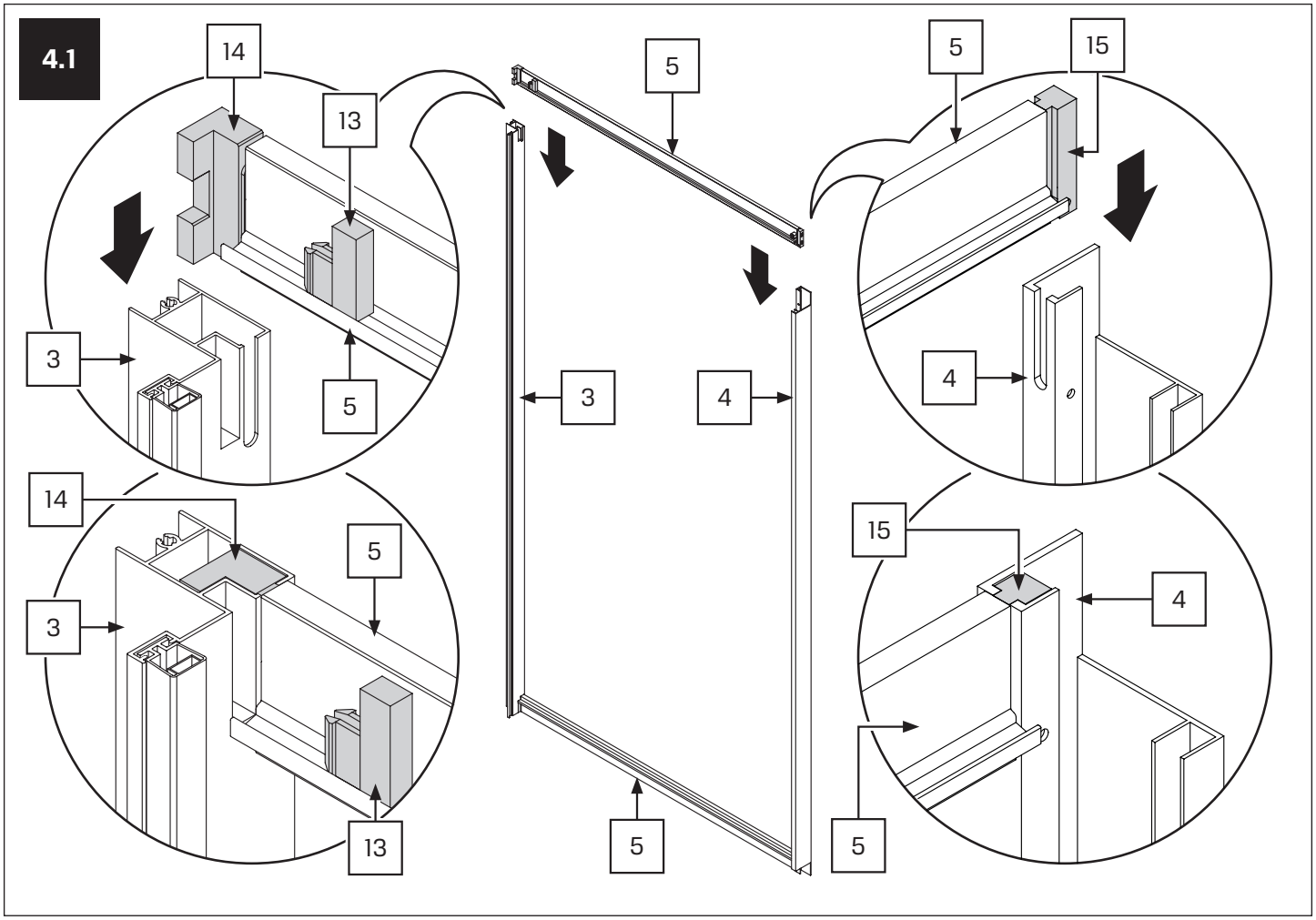

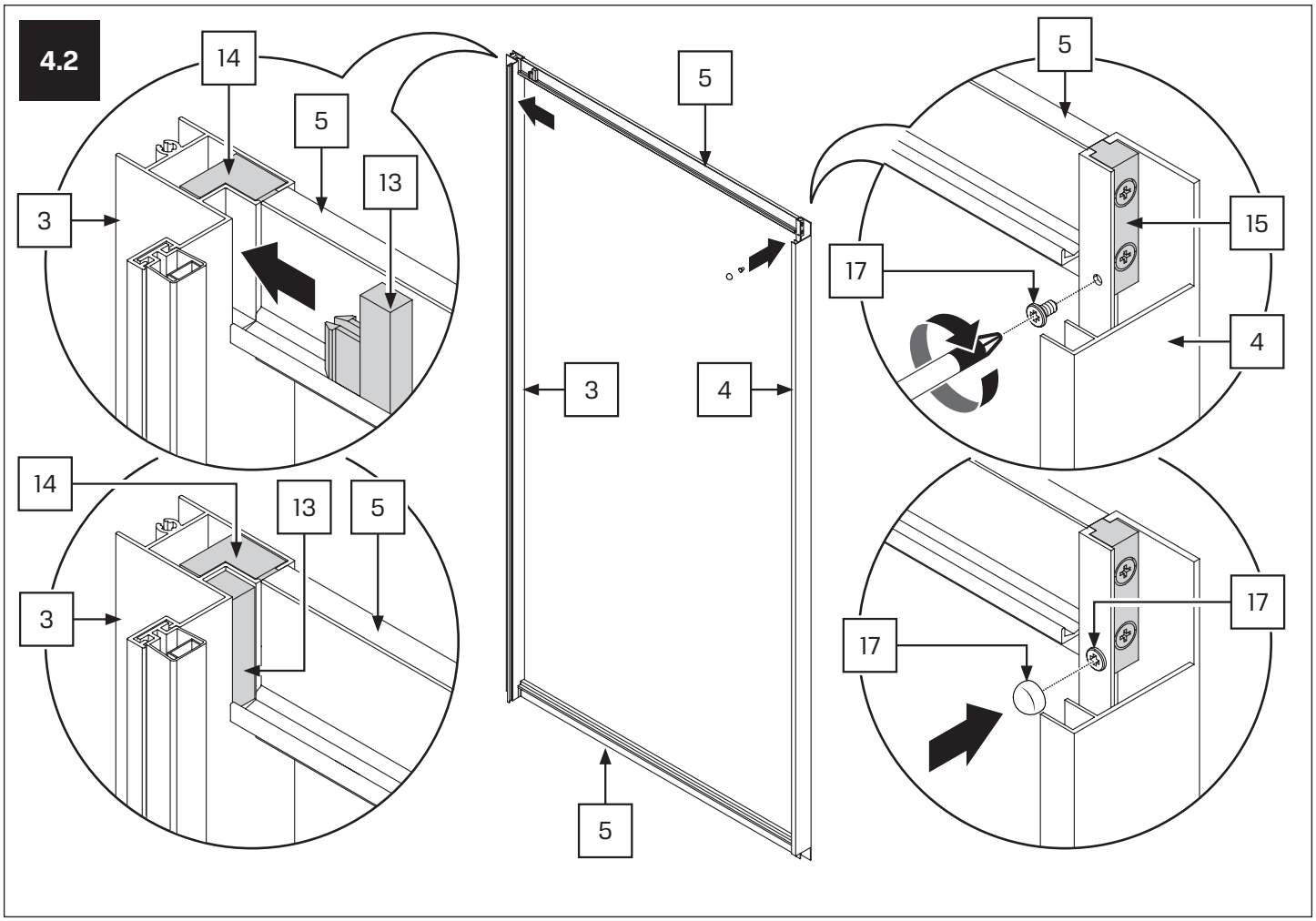
4.2
14
5
13
3
5
5
15
17
4
3
4
14
13
5
3
17
17
5

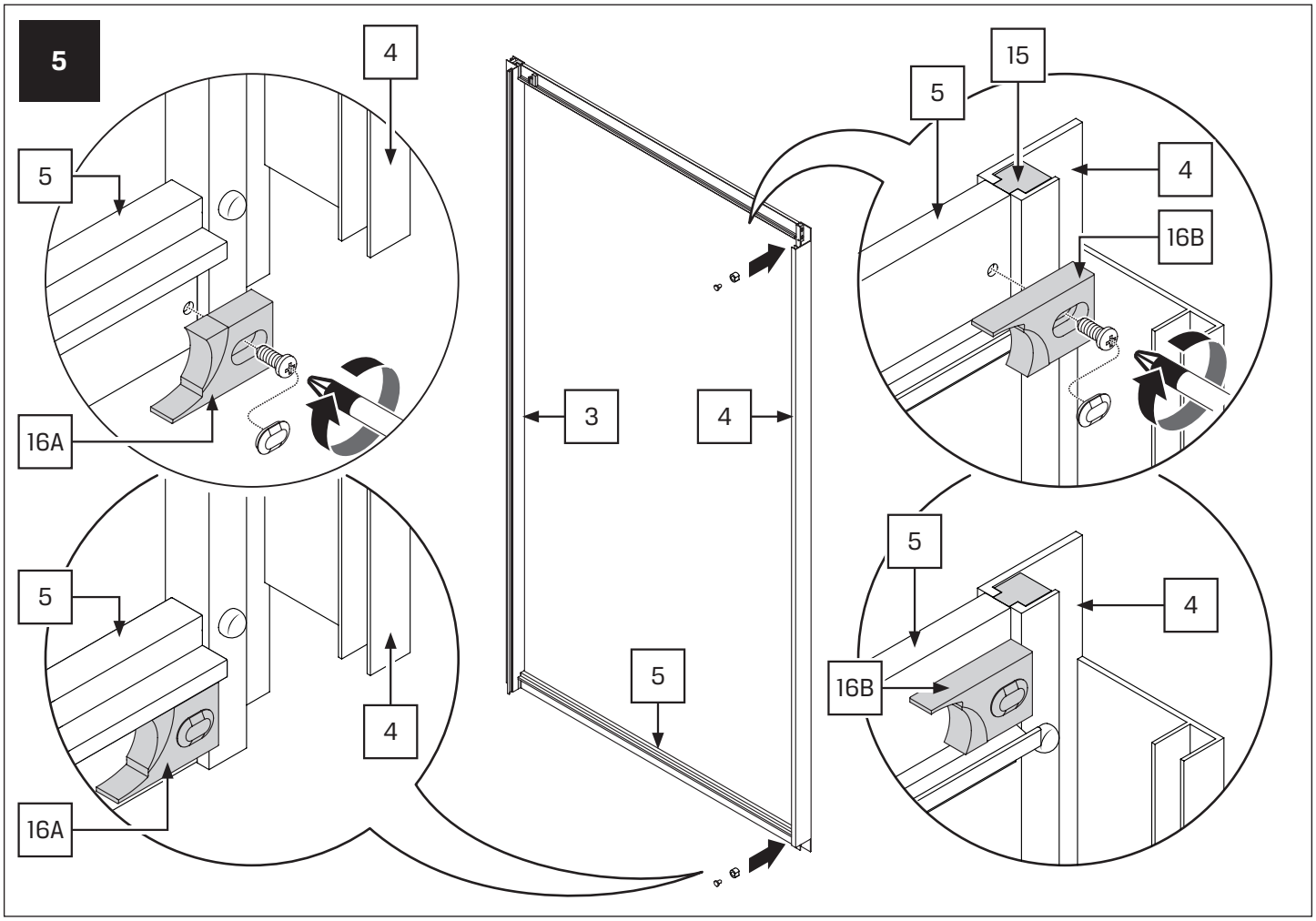
5
4
5
16A
5
4
16A
3
4
5
15
5
4
16B
5
4
16B

6

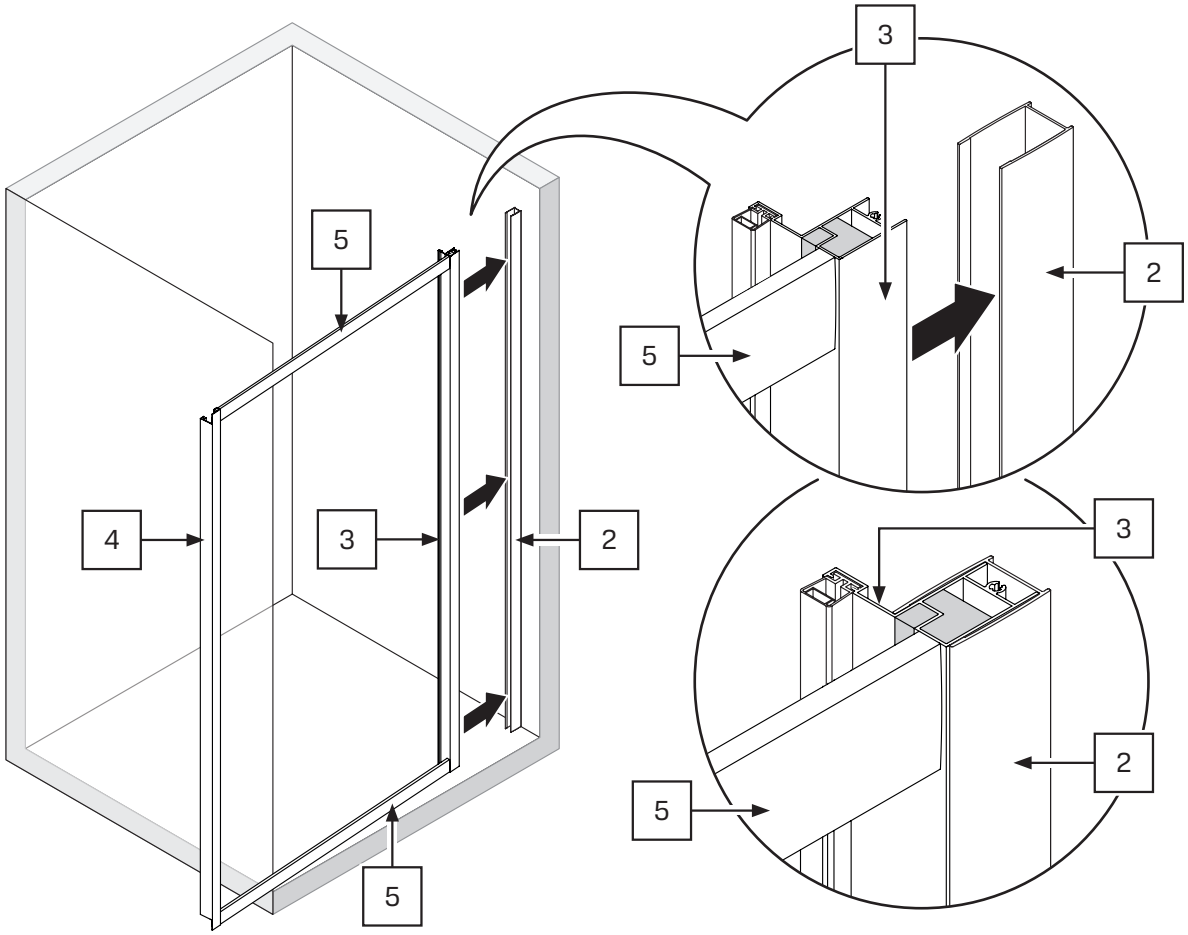

7

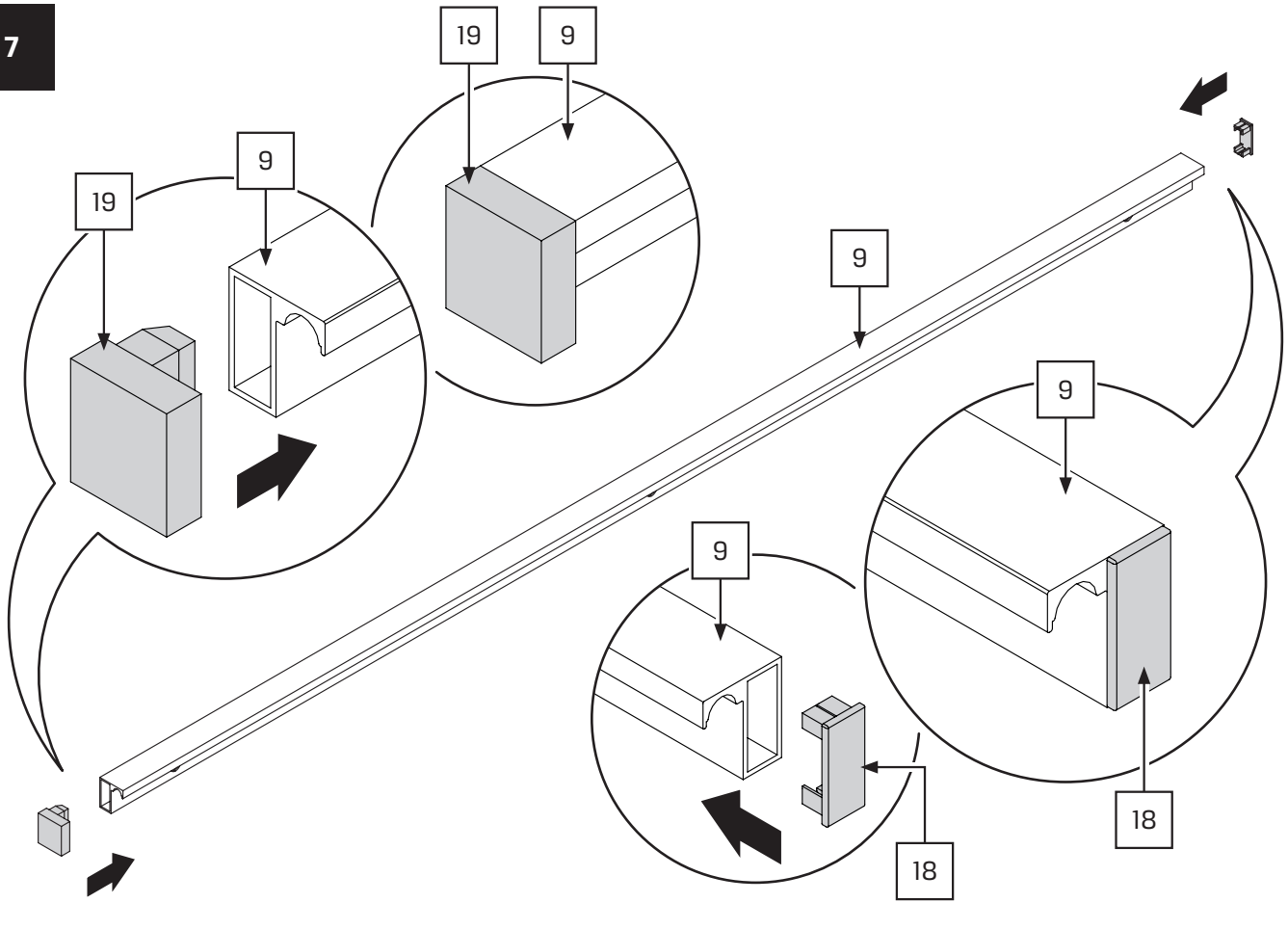

7.1

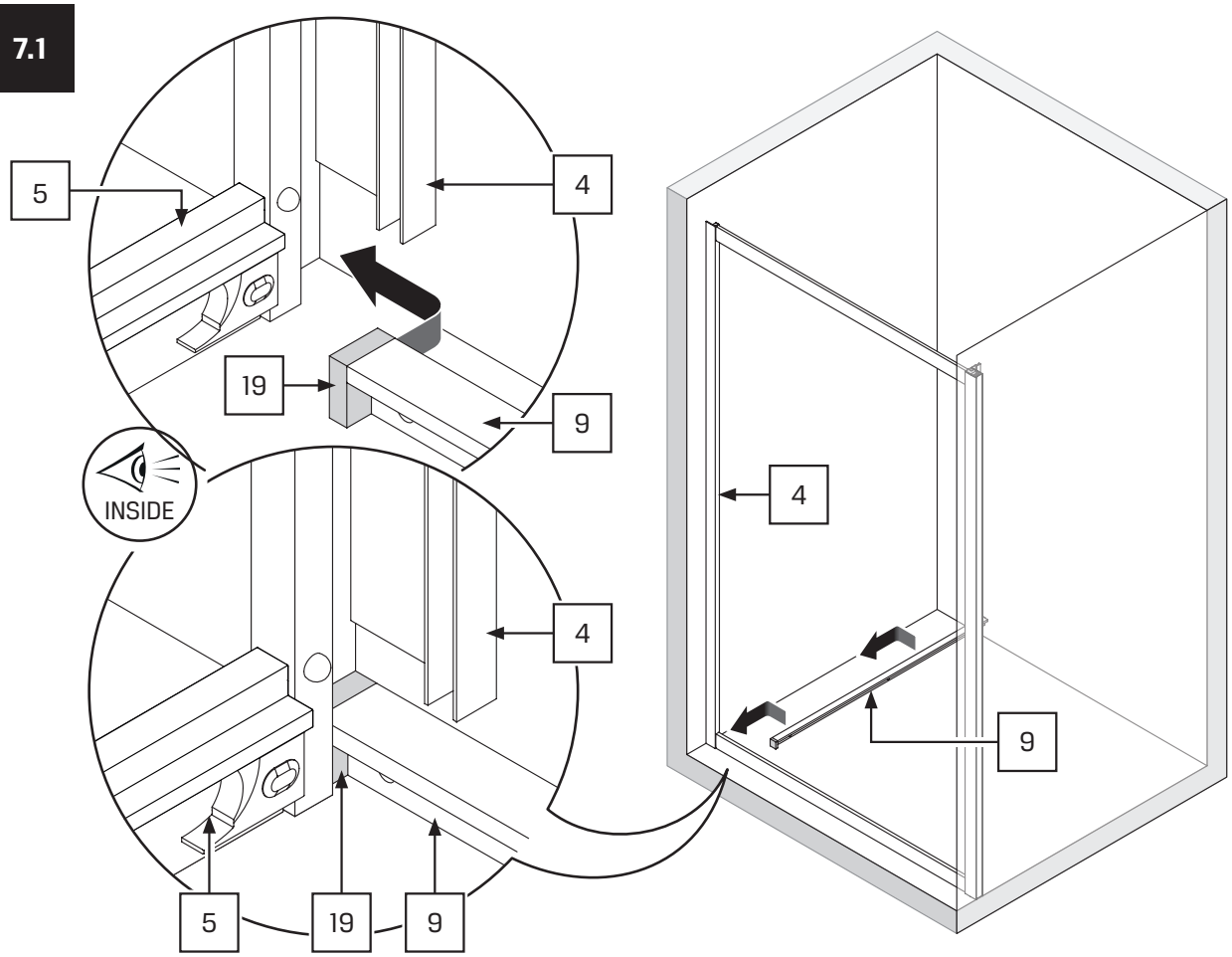

8

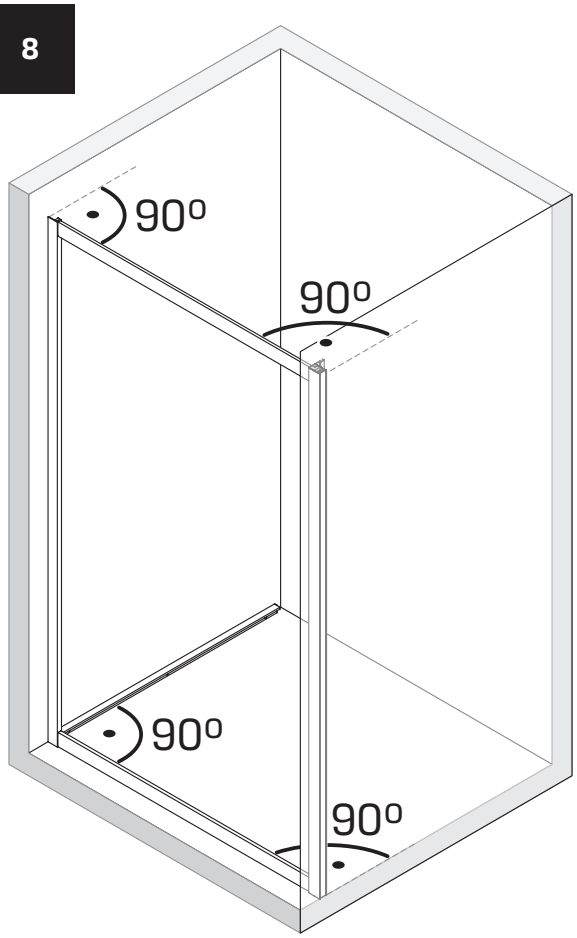

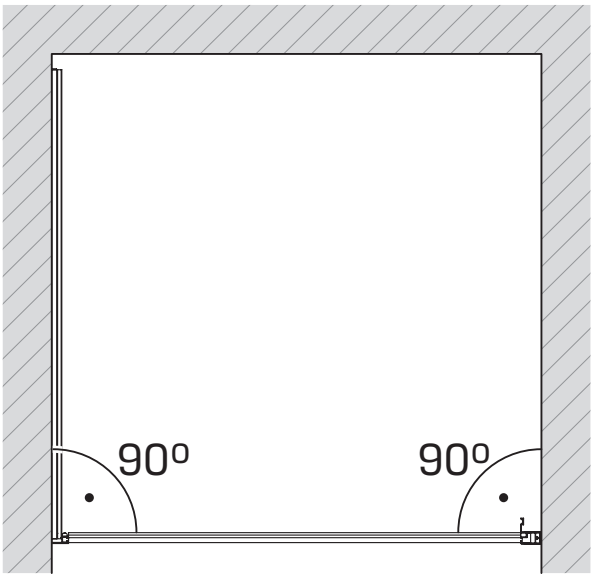

8.1

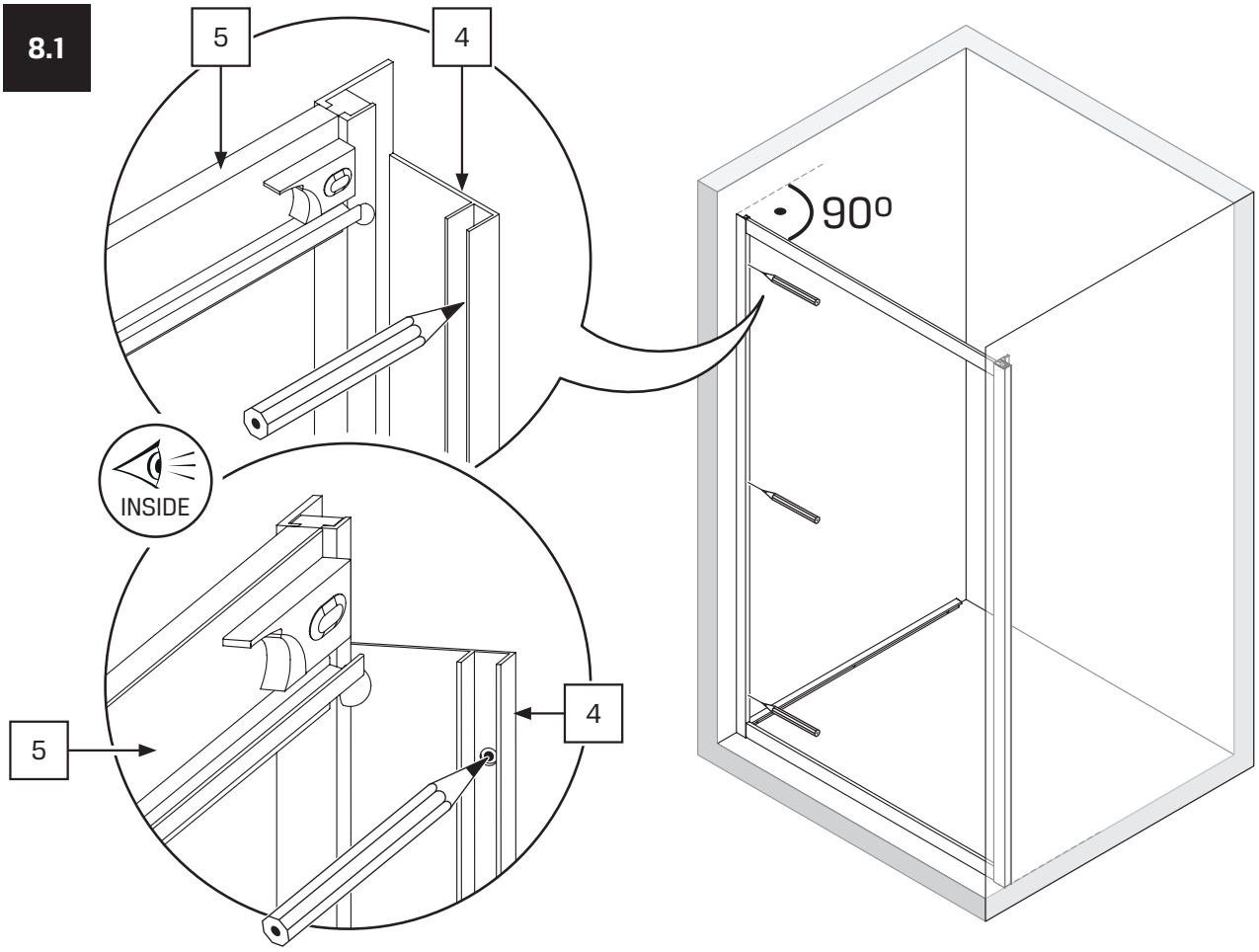

8.2

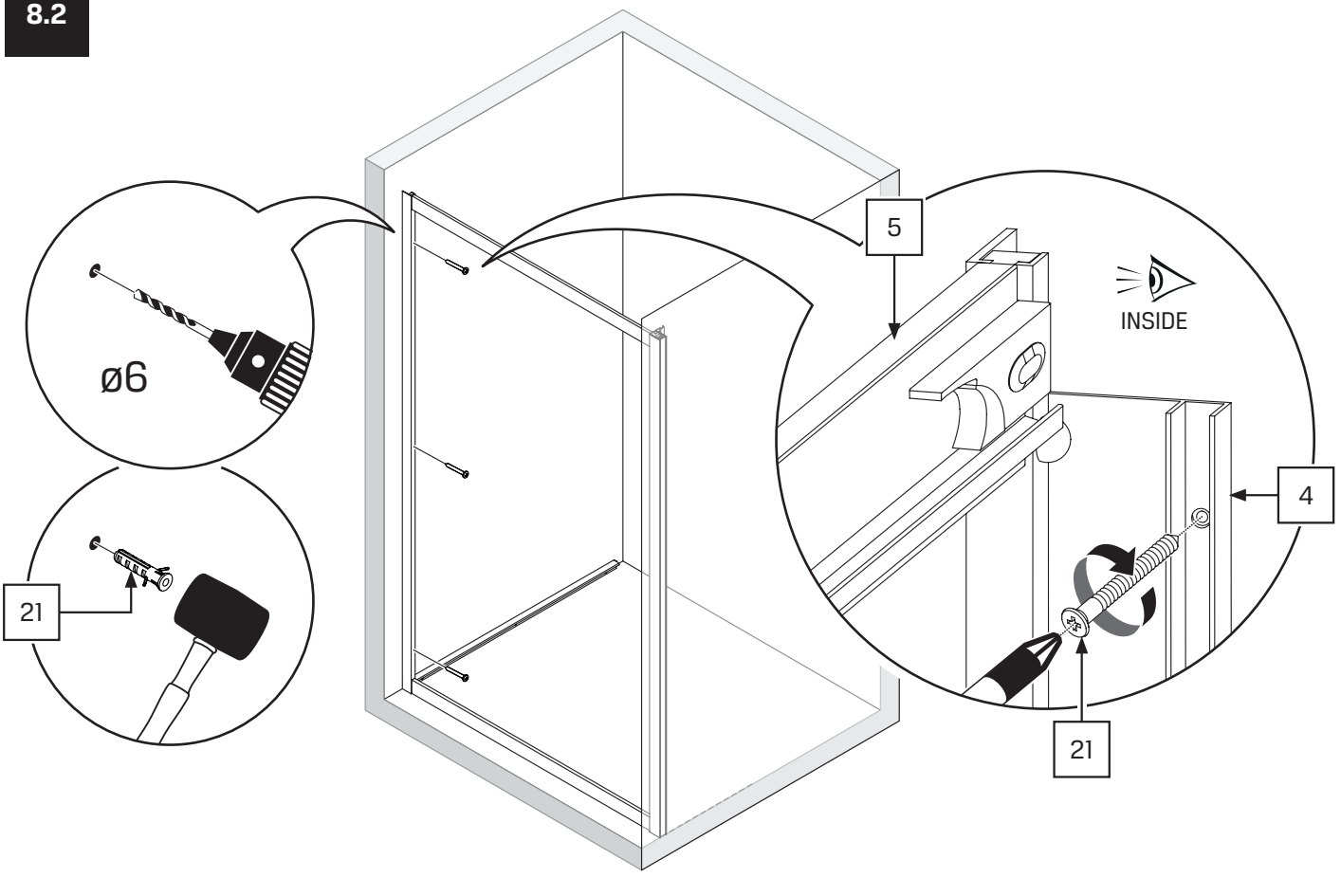

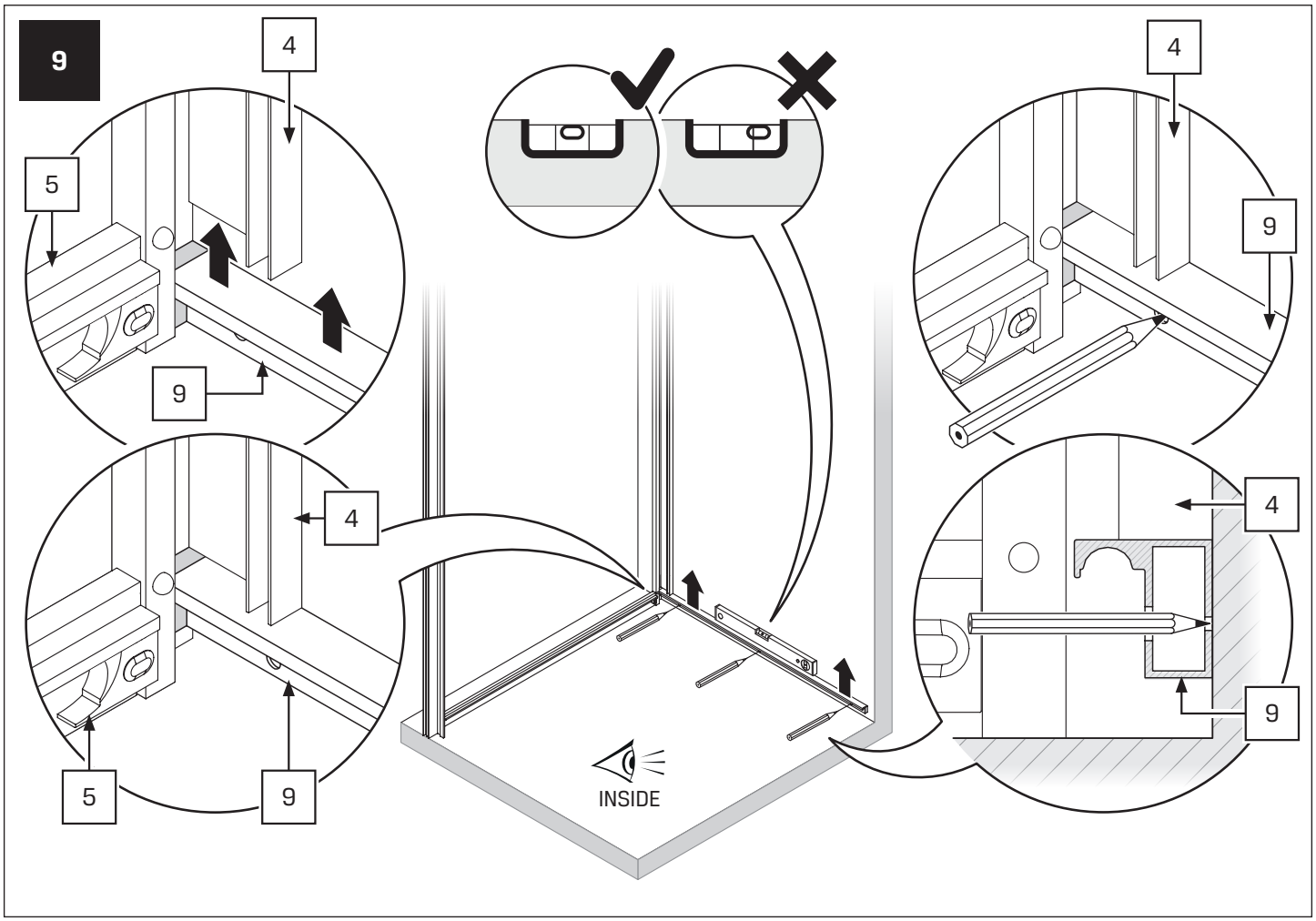
9
4
5
9
4
9
4
5
9
4
9
INSIDE

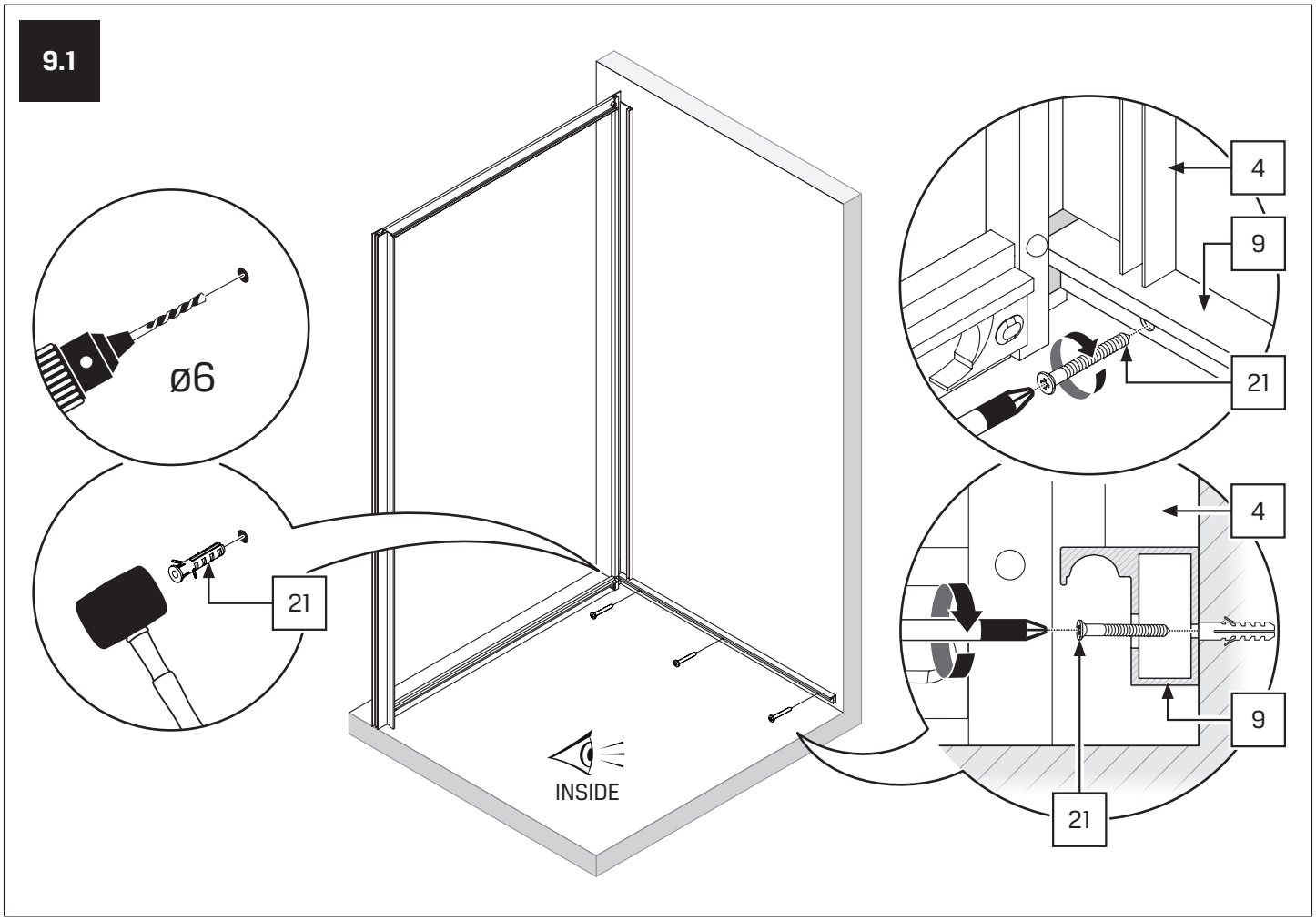
9.1
ø6
21
4
9
21
4
9
21
INSIDE

10

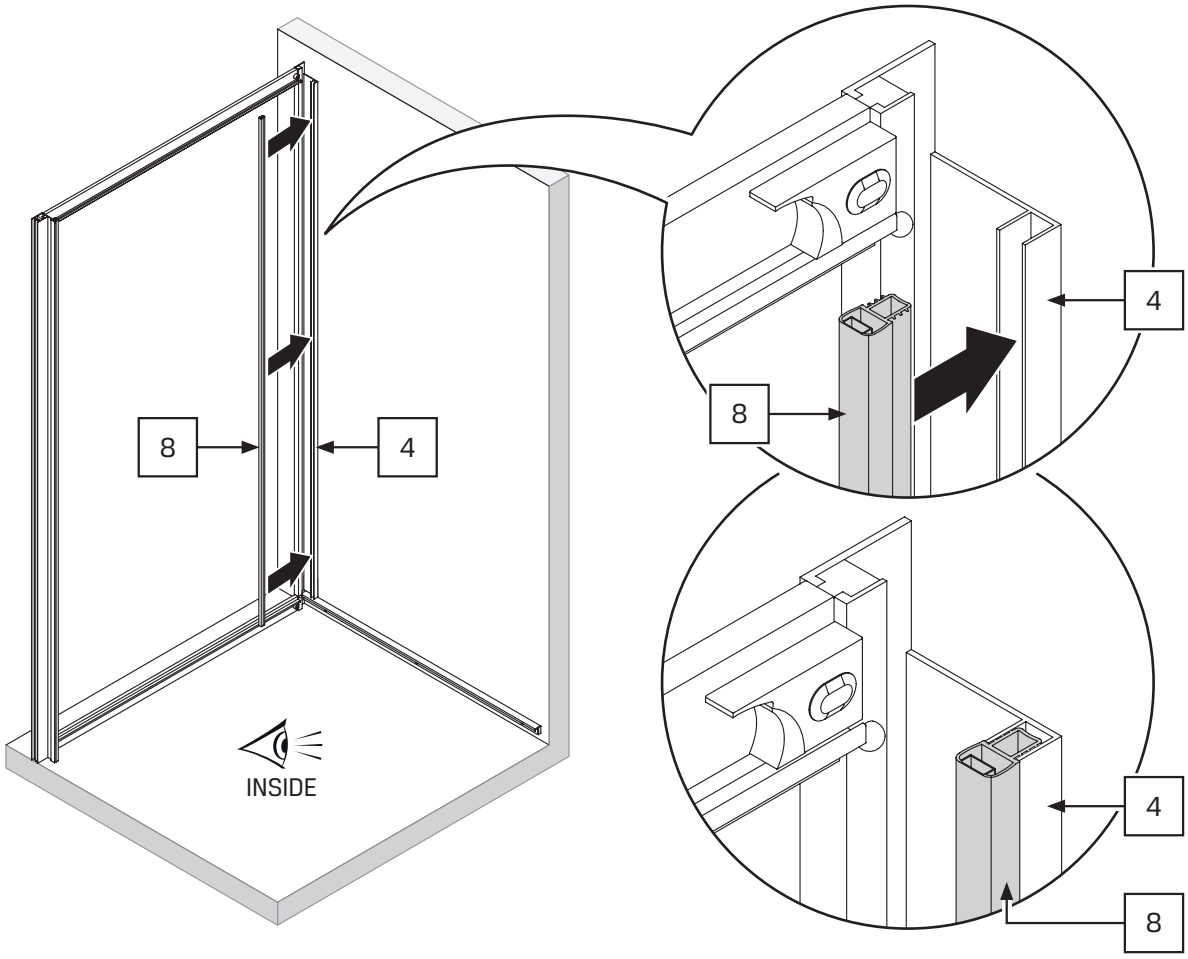

11

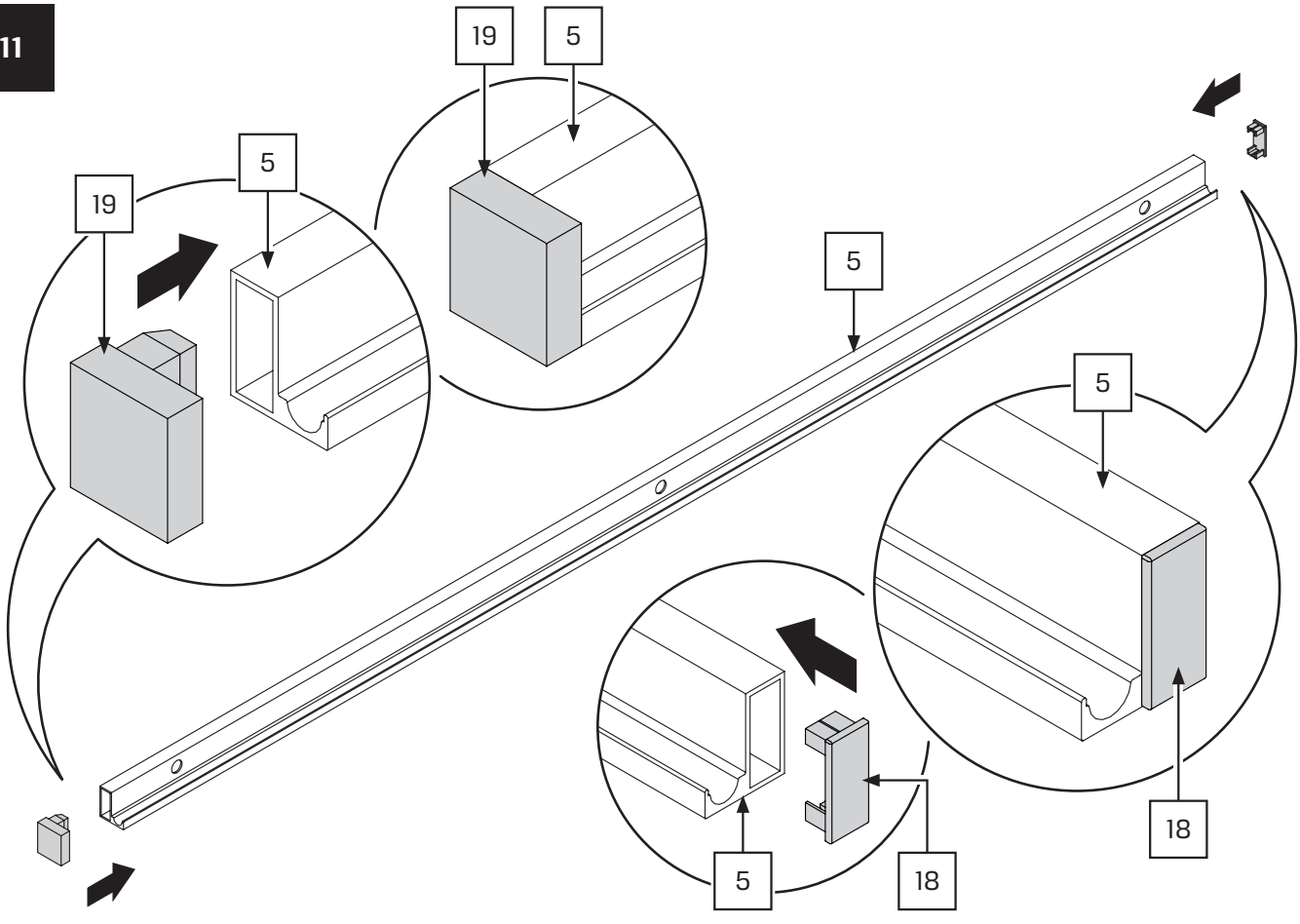

11.1

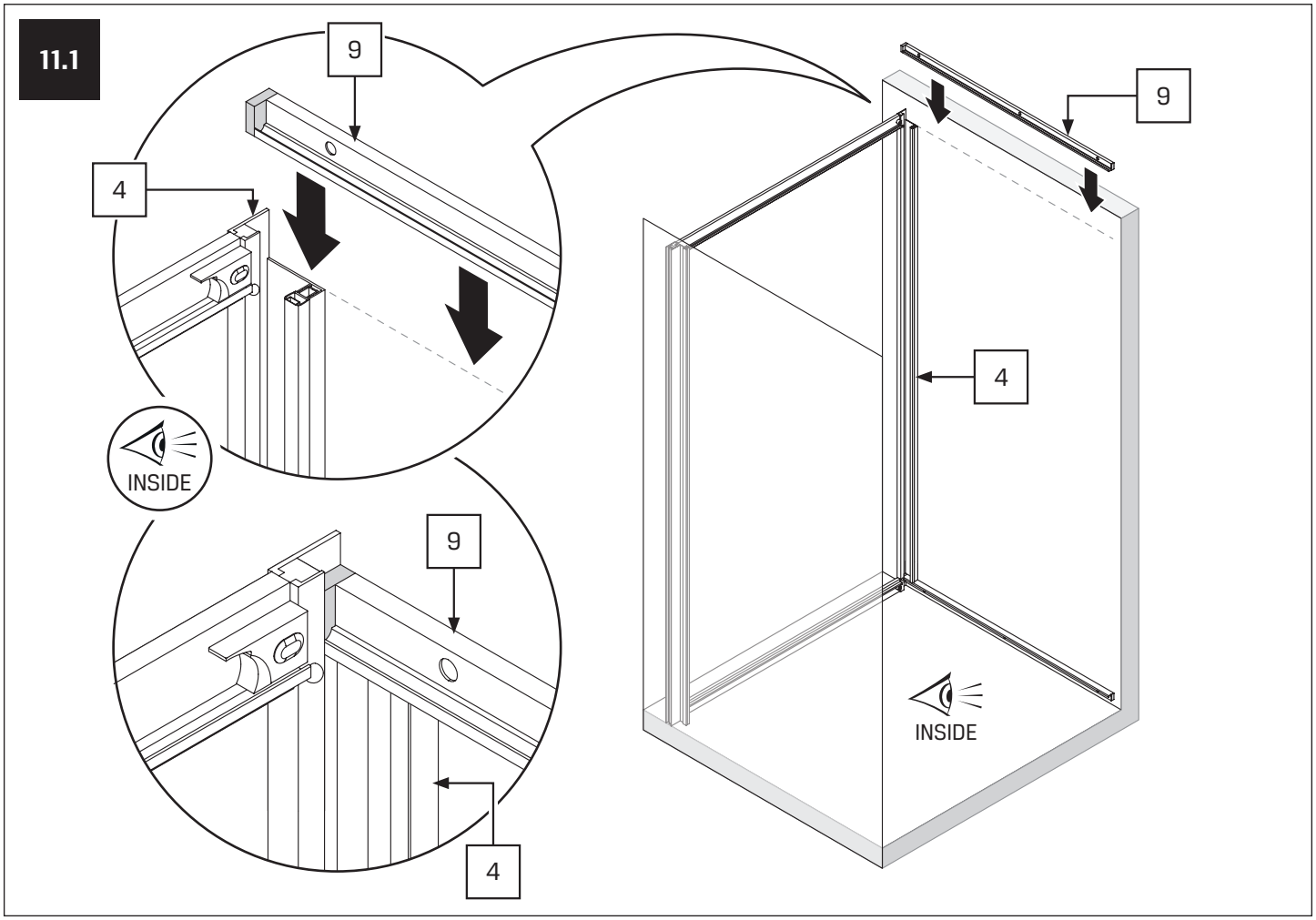

11.2

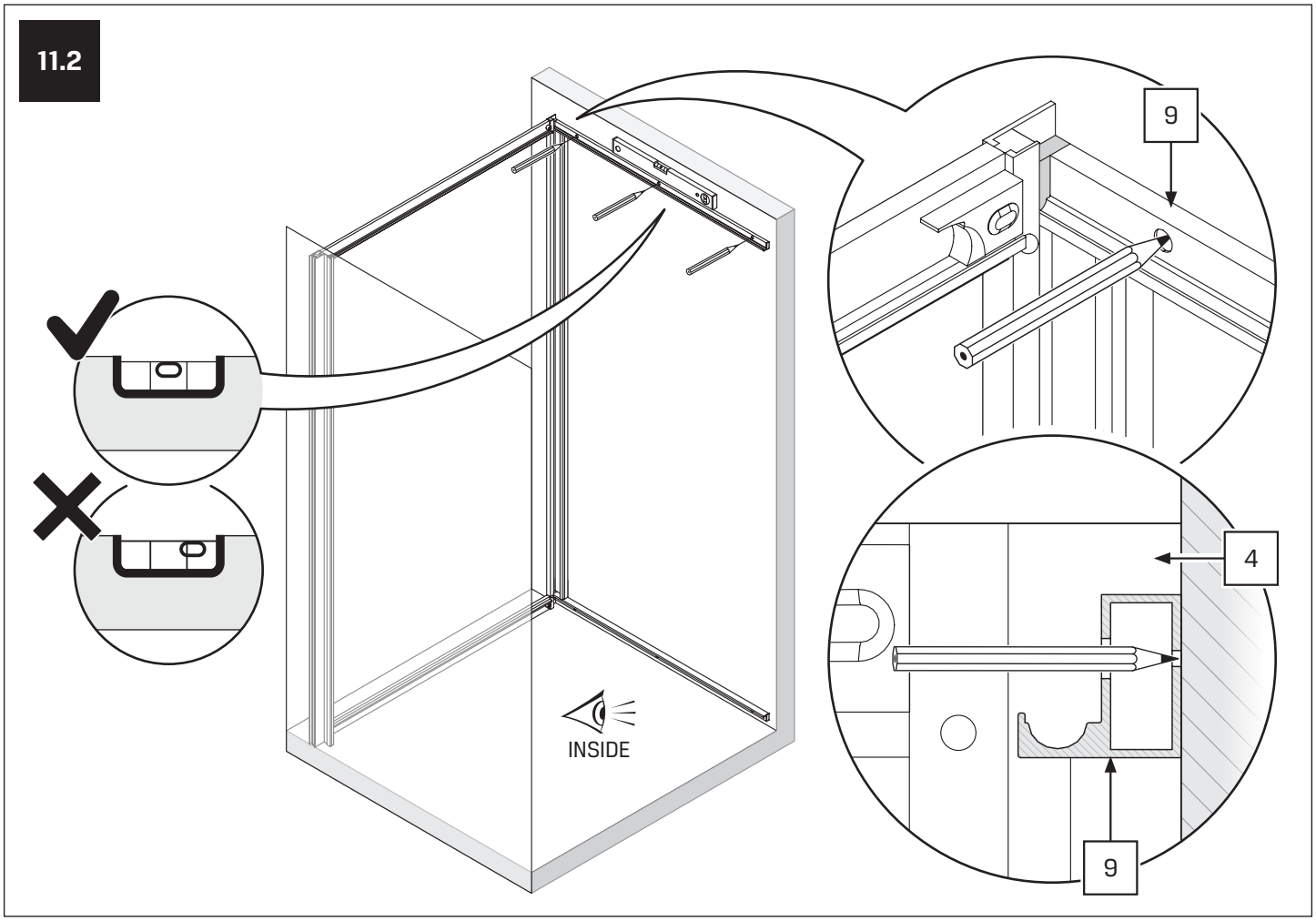

11.3

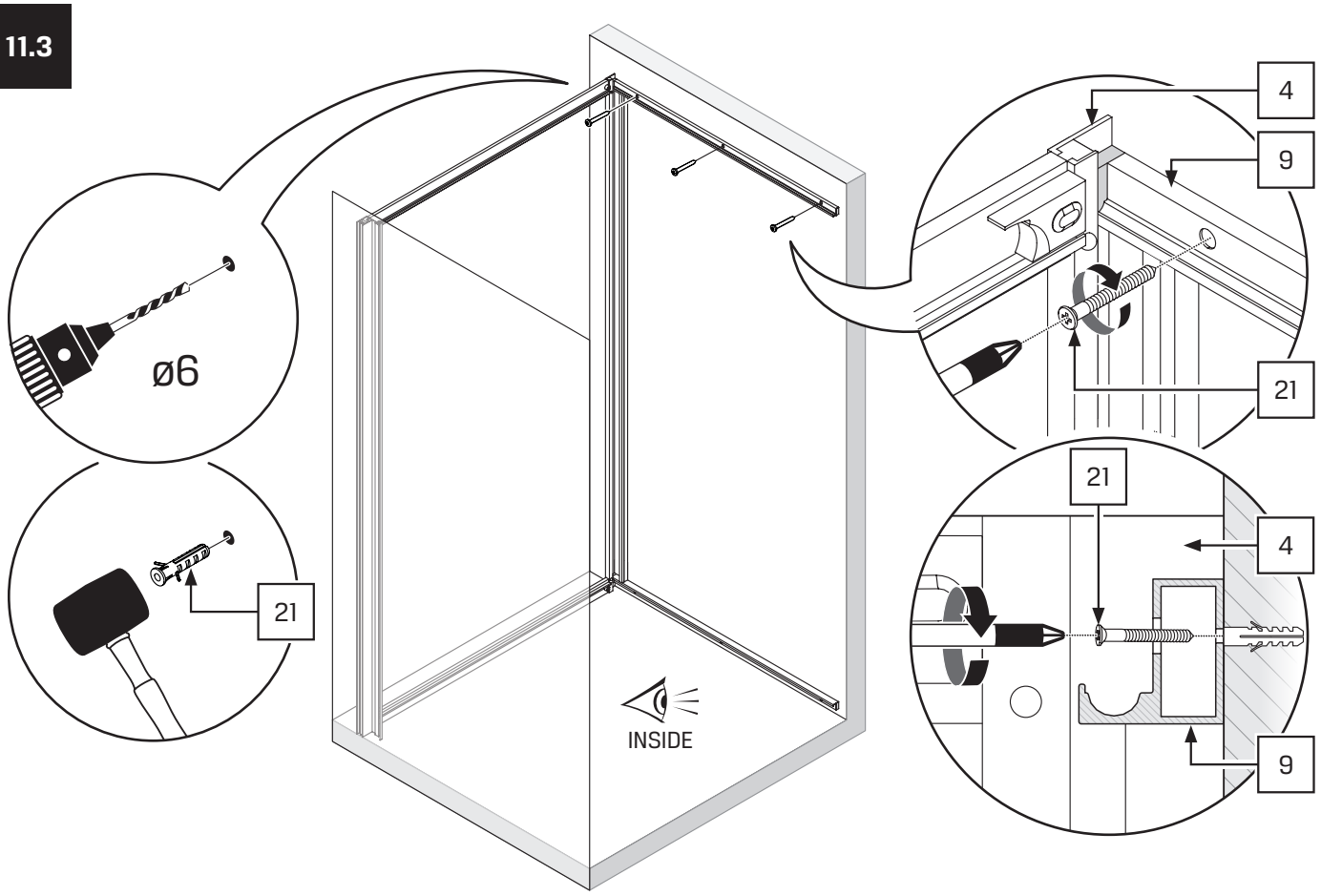

12

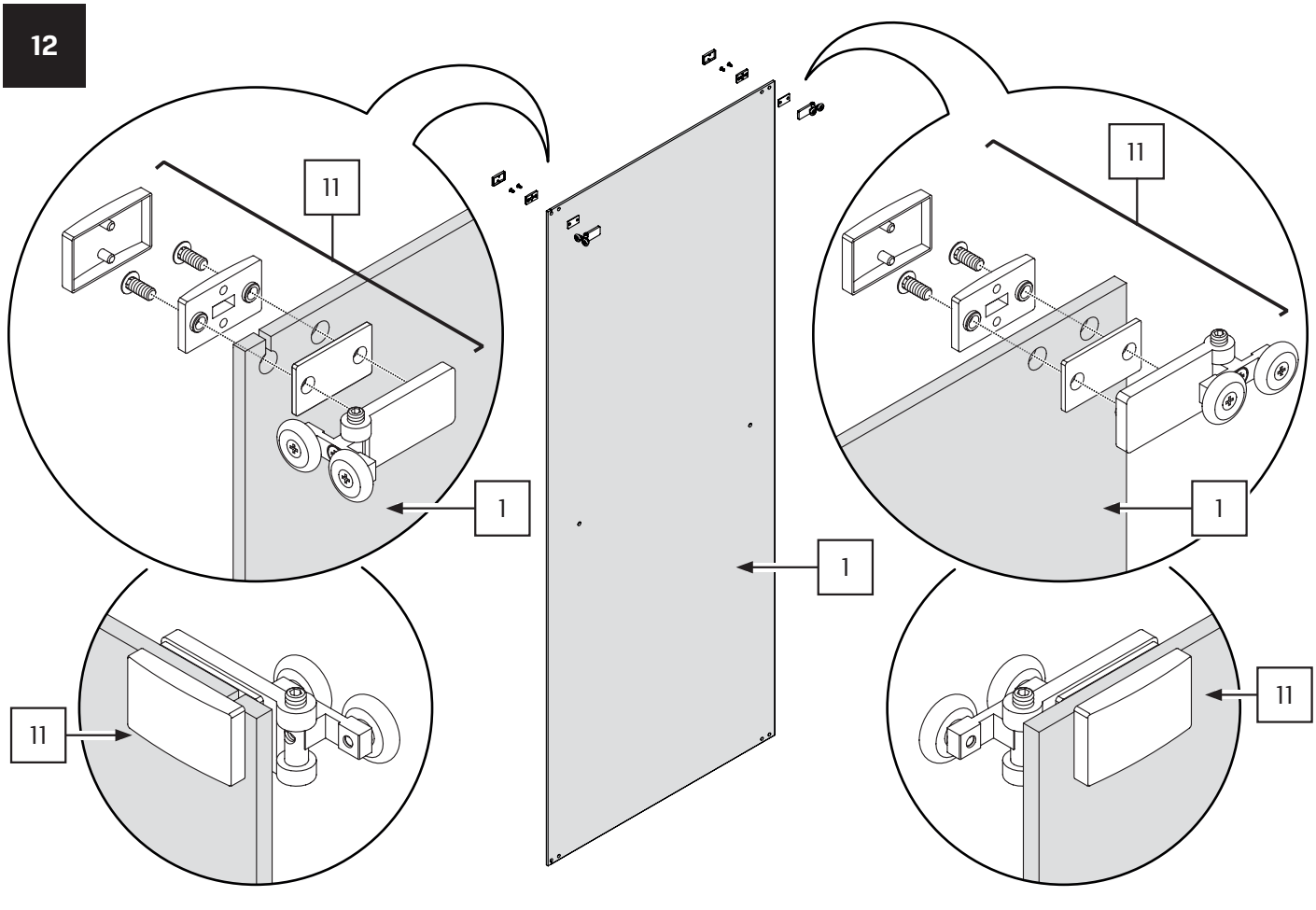

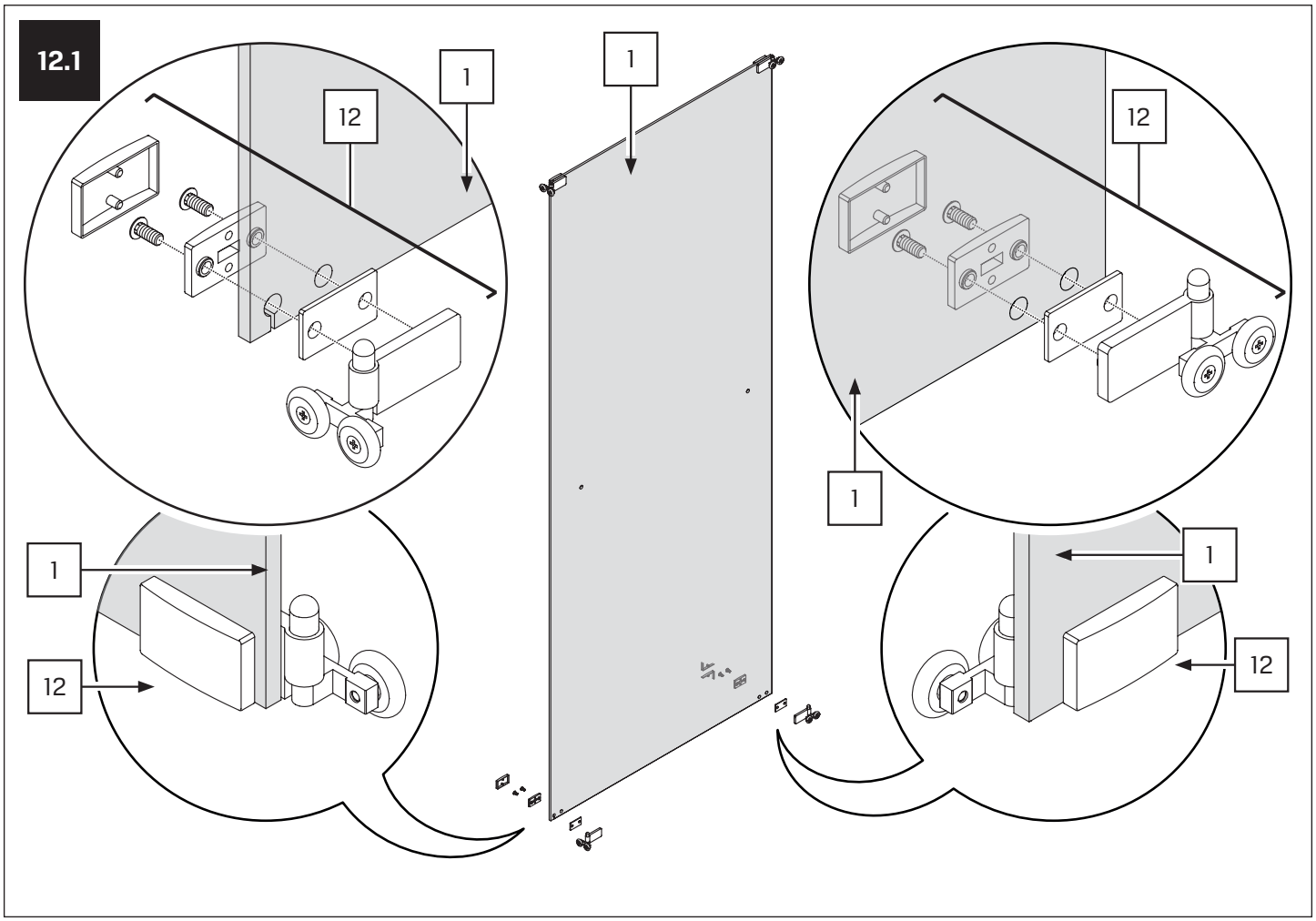
12.1
1
12
1
12
1
12
1
1
12

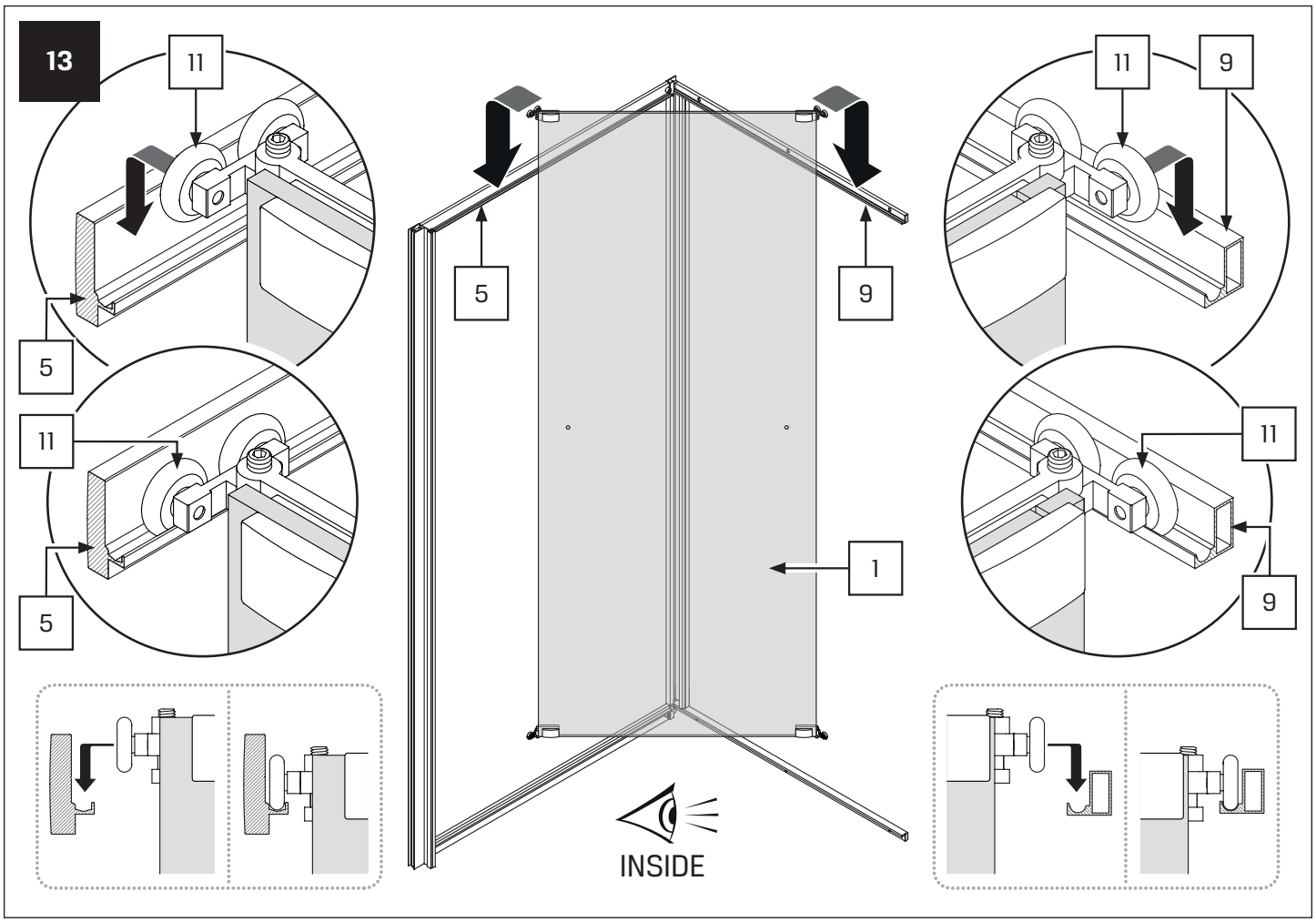
13
11
5
11
5
5
9
1
INSIDE
11
9
11
9

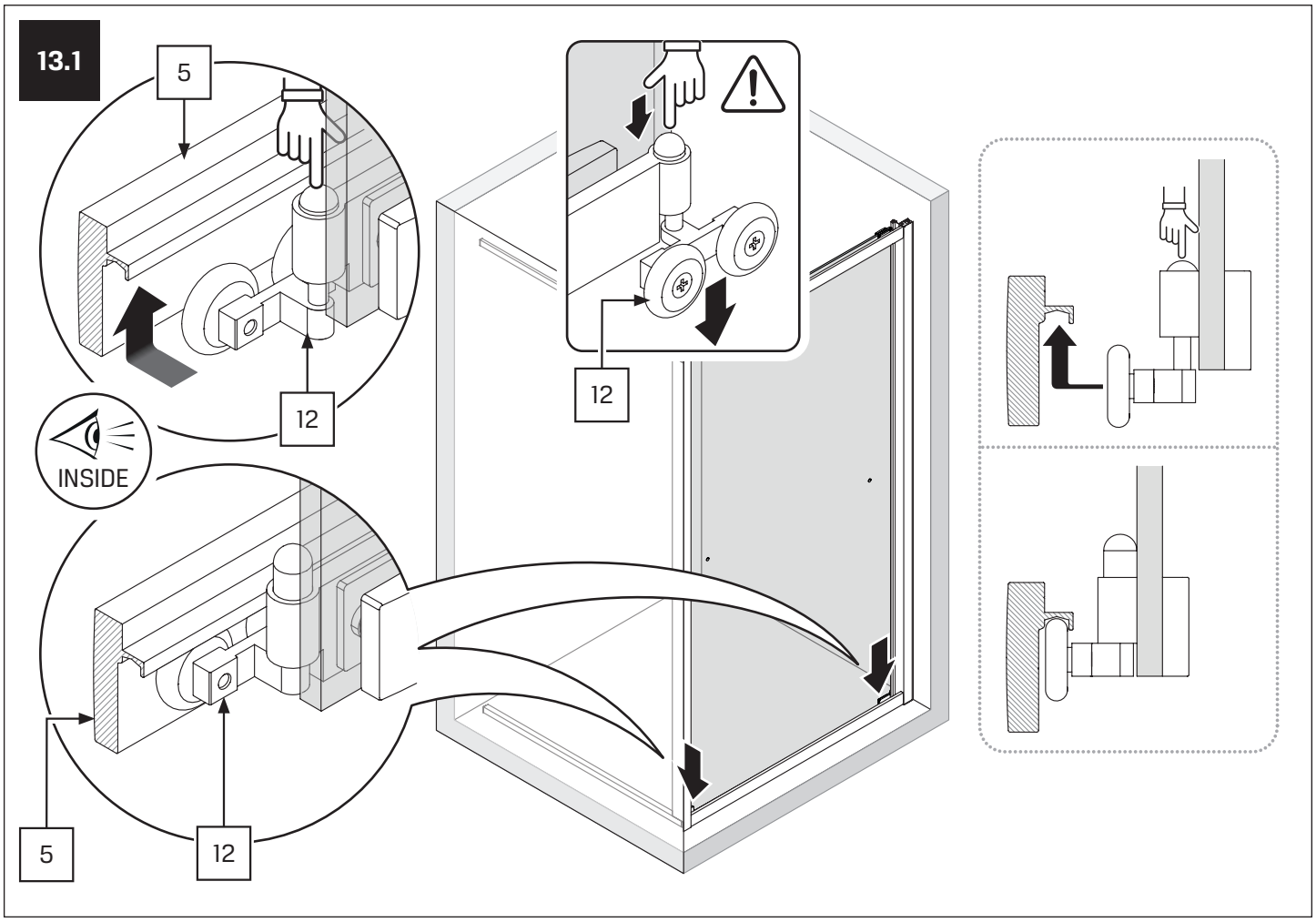
13.1
5
12
INSIDE
5
12
12

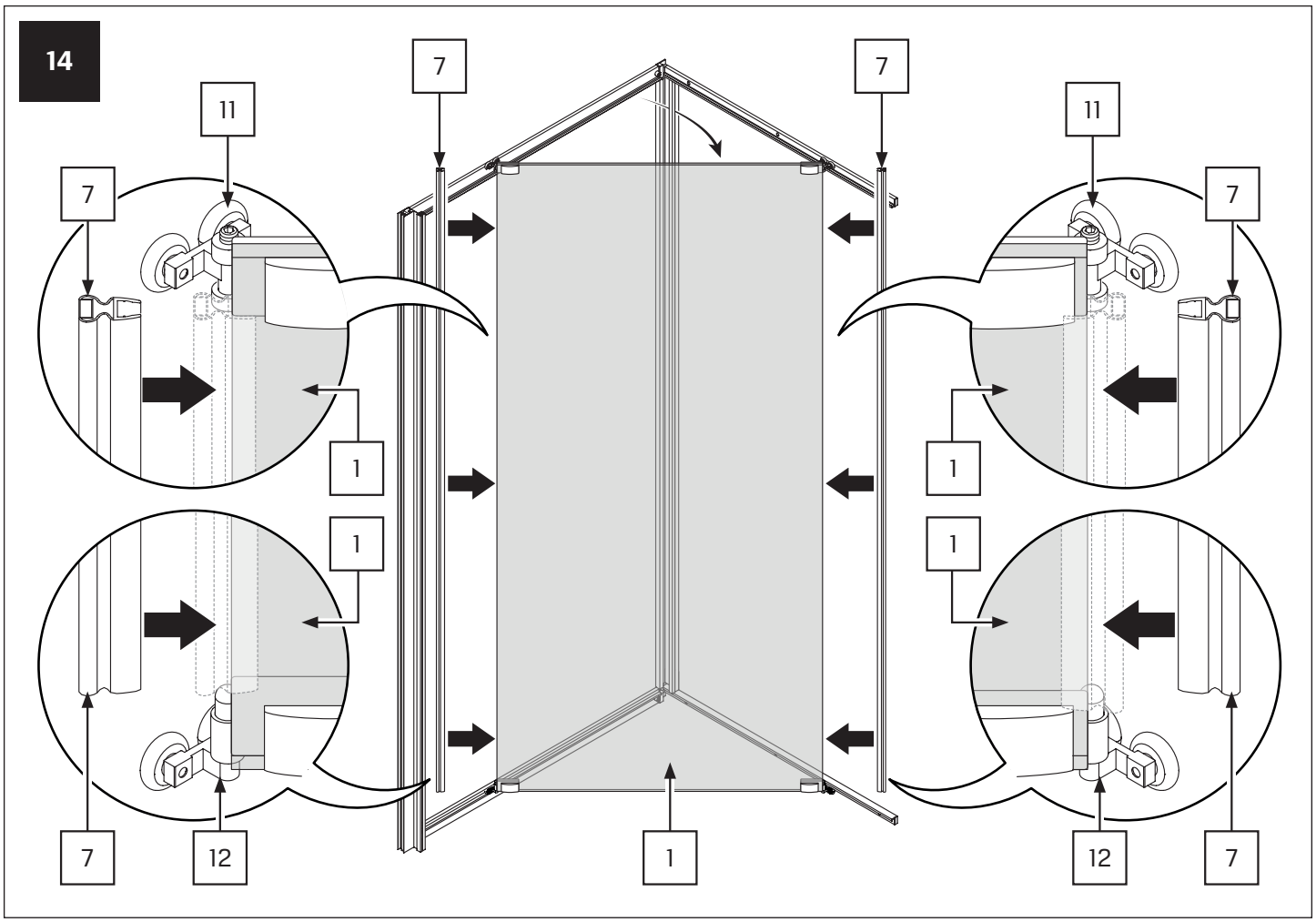
14
7
7
11
11
7
7
1
1
1
1
7
12
1
12
7

15

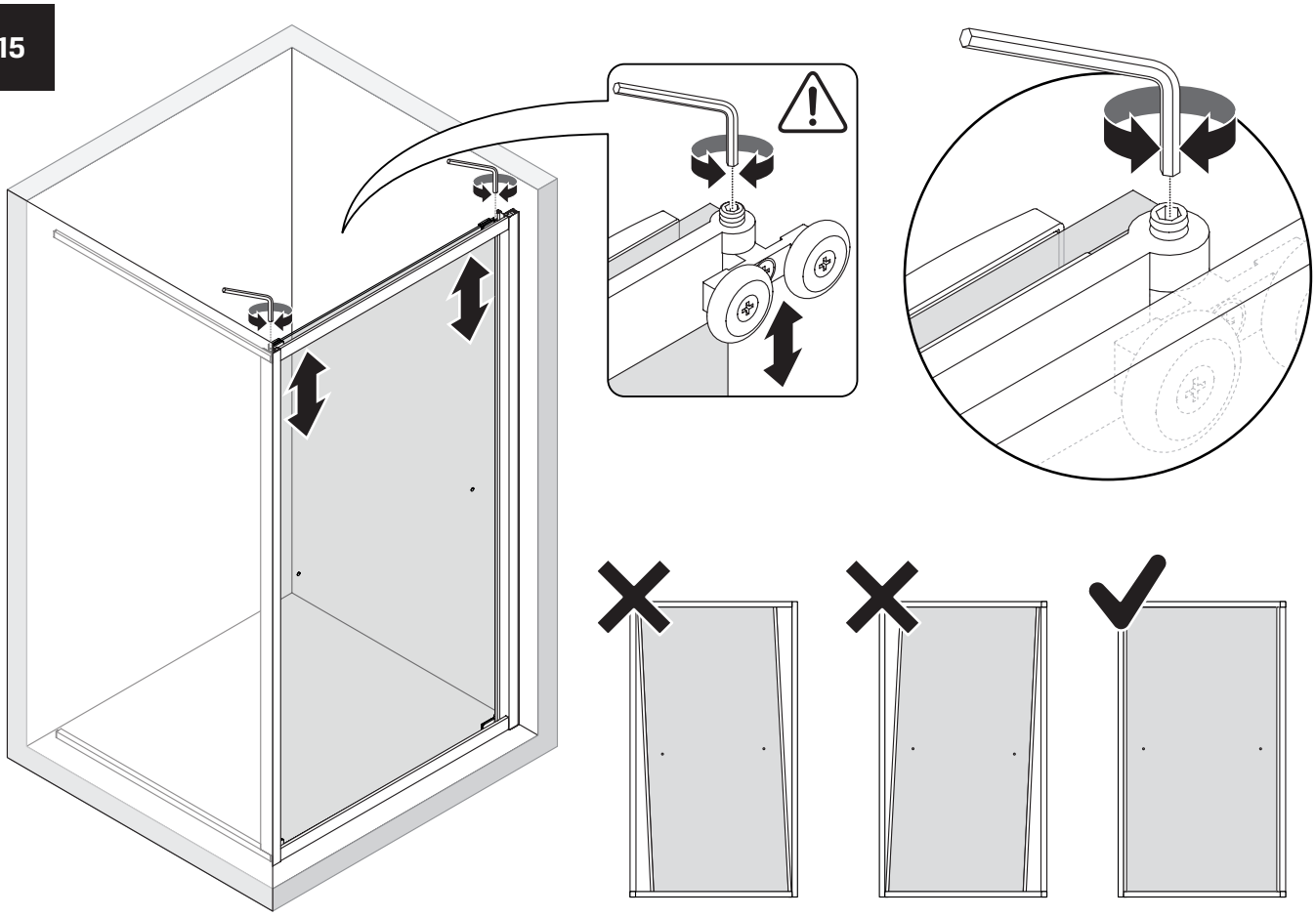

16

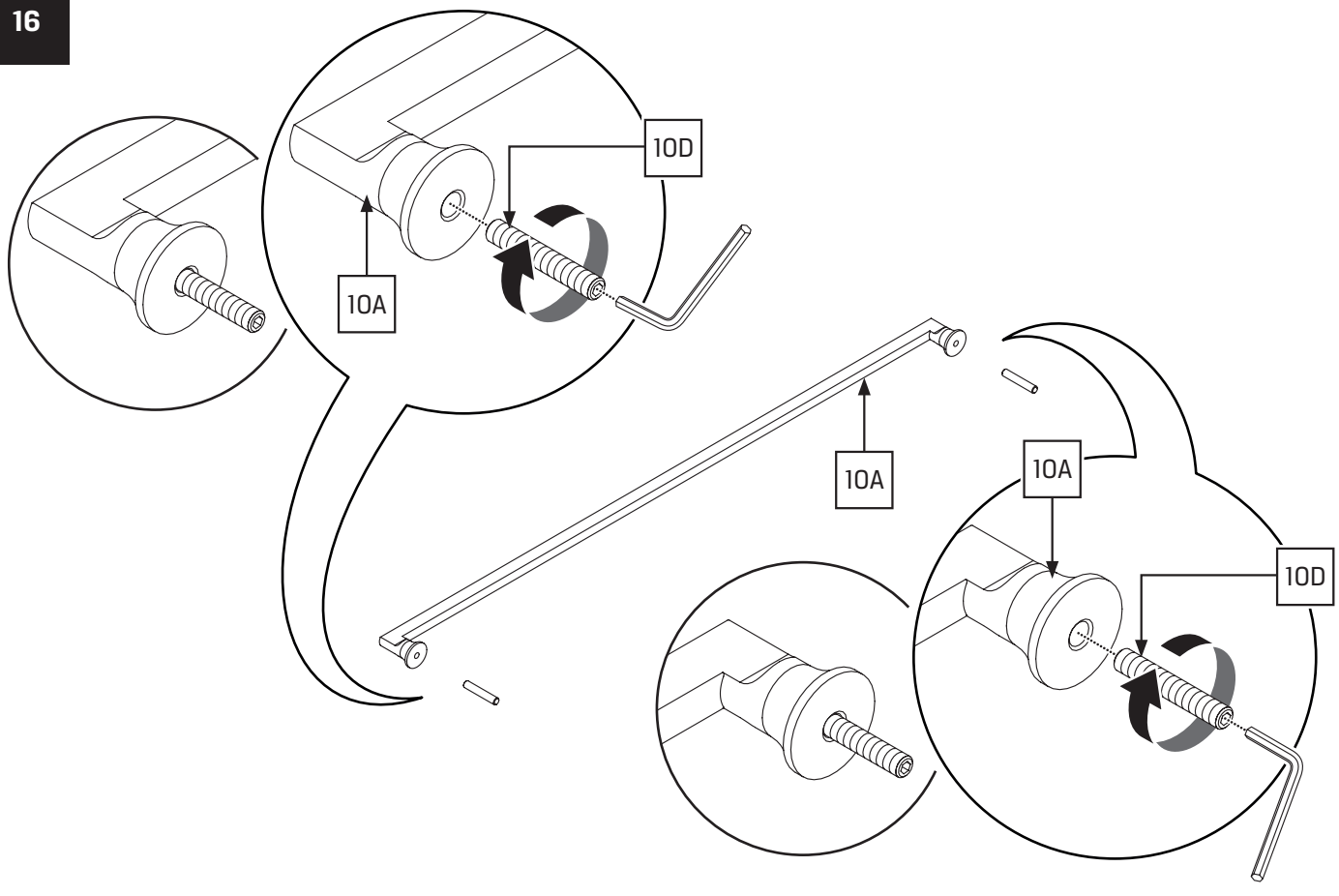

16.1

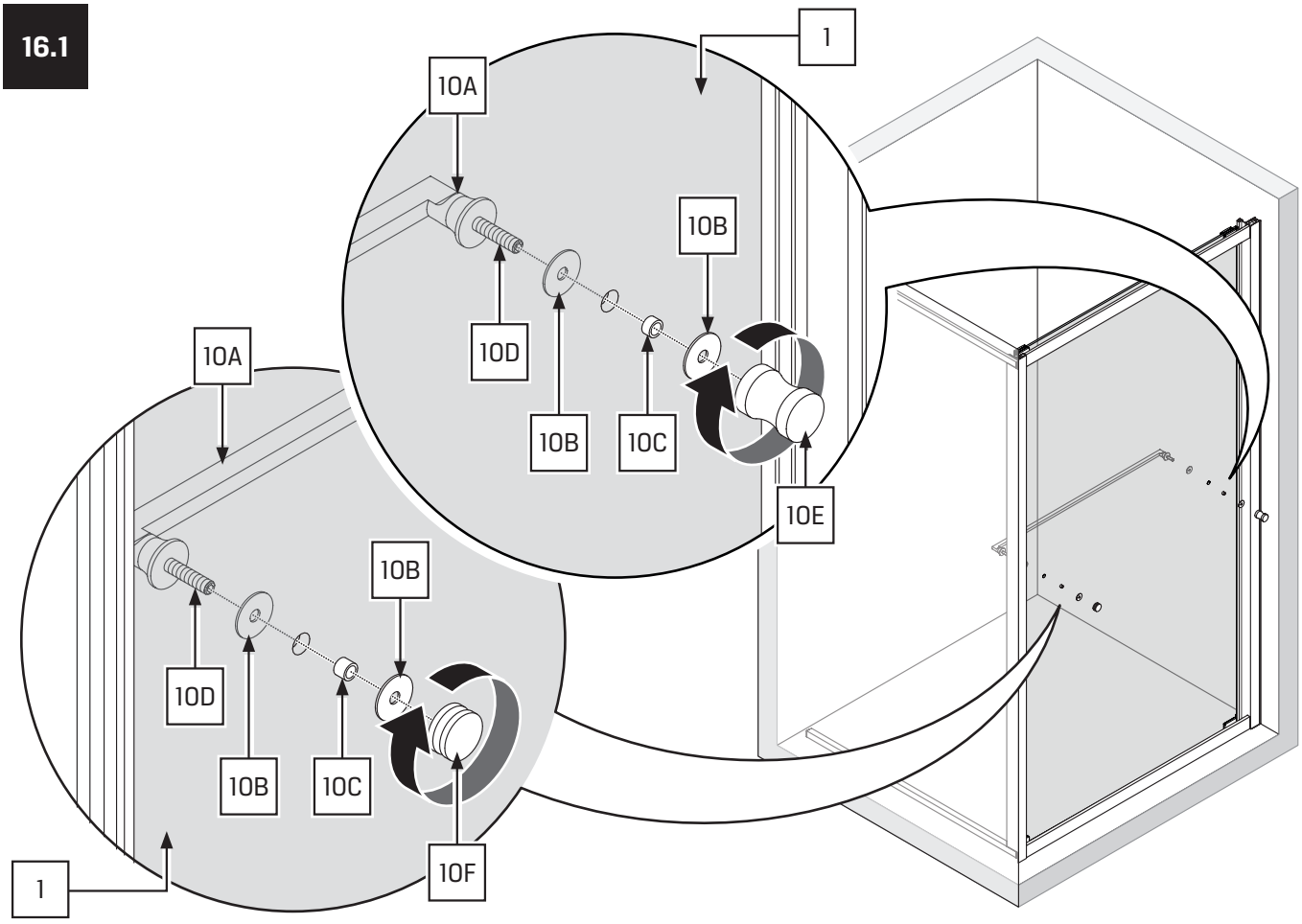

17

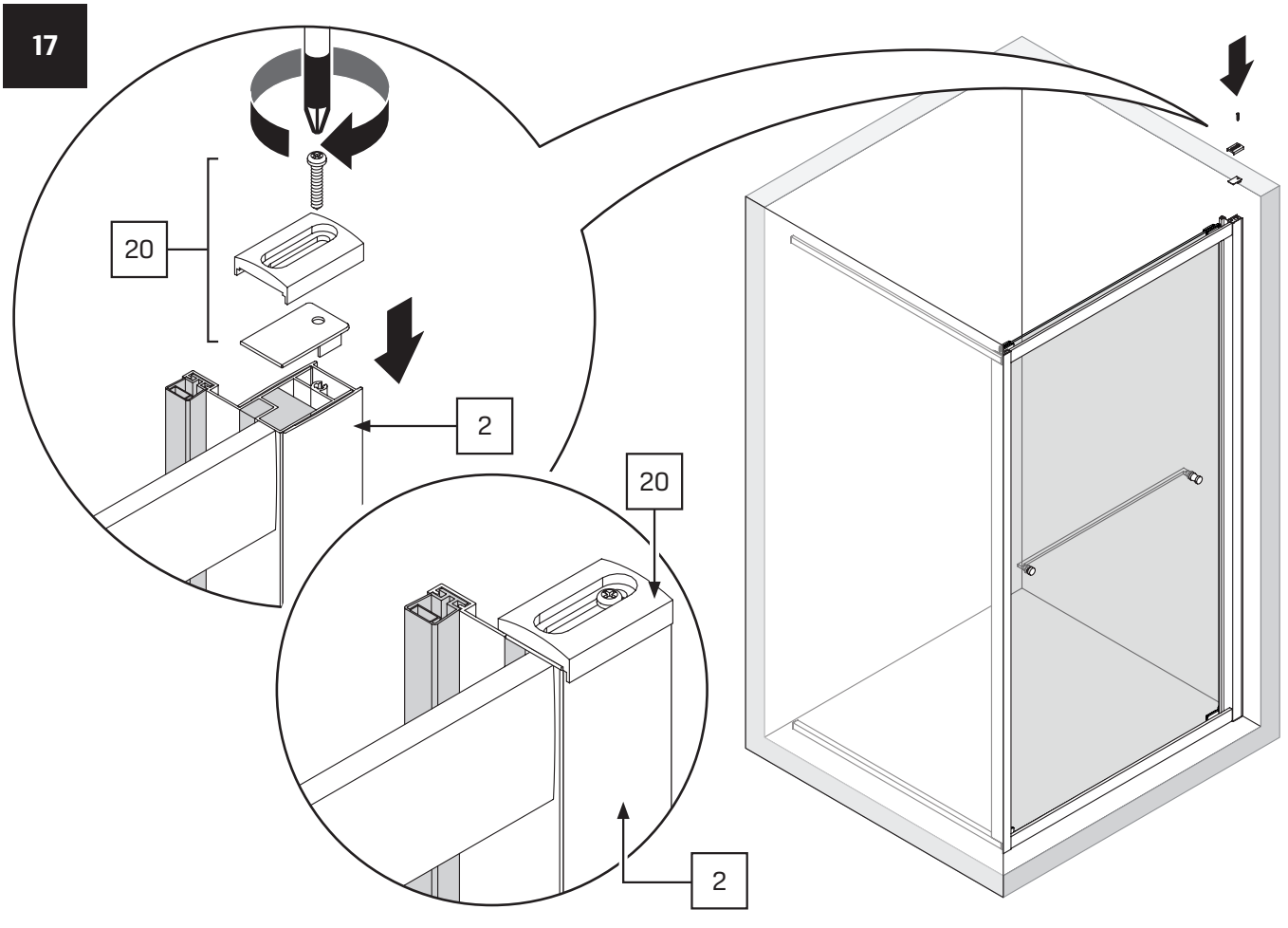

18

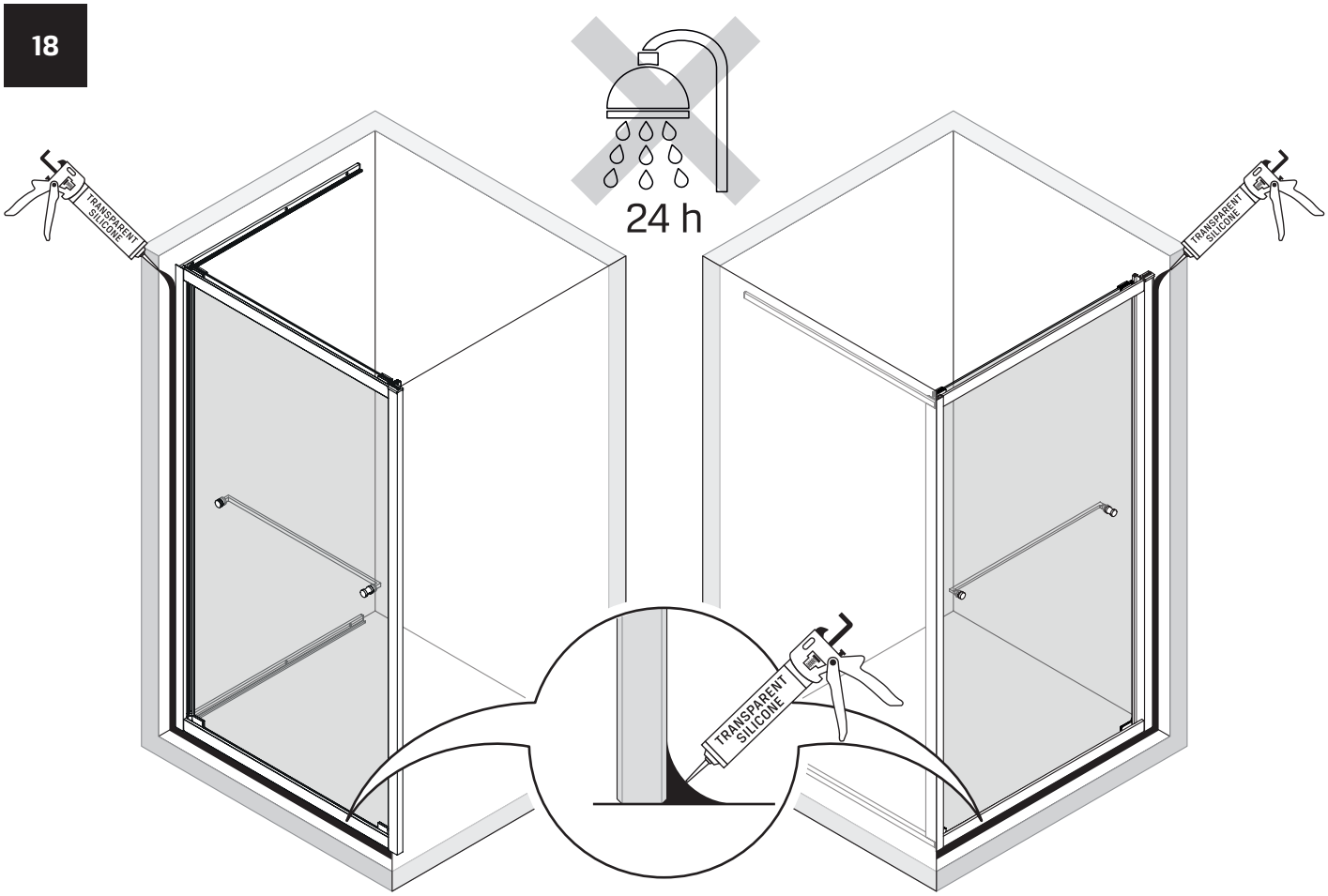
24 h
TRANSPARENT SILICONE
TRANSPARENT SILICONE
TRANSPARENT SILICONE



NEW TRENDY Sp. z o.o.
Tel. 67 262 12 66
serwis@newtrendy.pl
www.newtrendy.pl